MINOS Far Detector Electronics
- Technical Reference Manual –

Version	Release Date	Comment
1.00	25-Sep-01	First release

Note: Use of Bookmarks will ease navigation through this large pdf document.

Far Detector Electronics Design Team

Harvard University
Nathan Felt, Gary Feldman, Sarah Harder,
Andrei Lebedev, Roy Lee, John Oliver

Oxford University
Colin Perry, Phil Sullivan

University of Texas, Austin
John England, Karol Lang

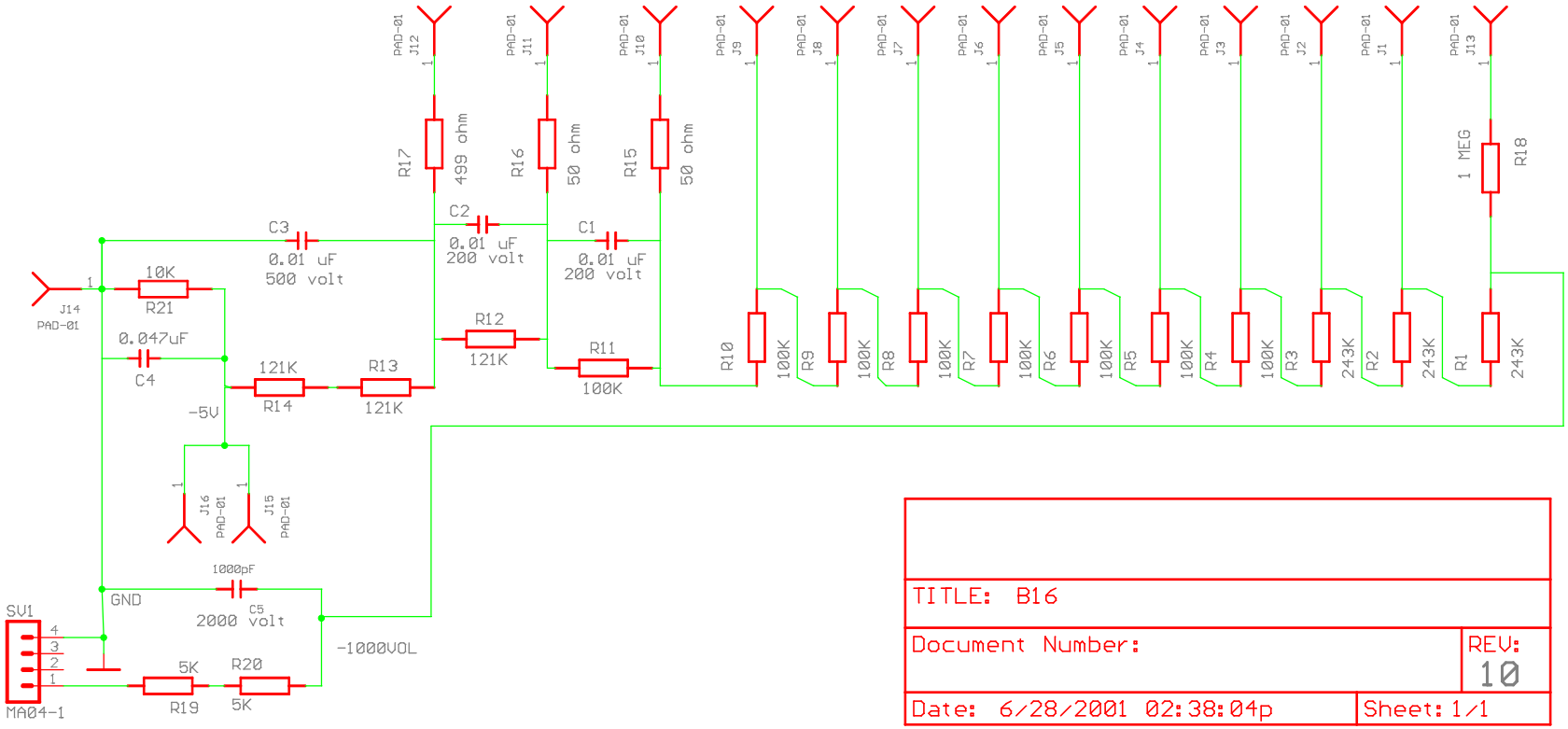

6/28/2001 02:39:47p f=0.9 C:\Program Files\EAGLE\Lang-proj\B16\B16.sch (Sheet: 1/1)

interconnect

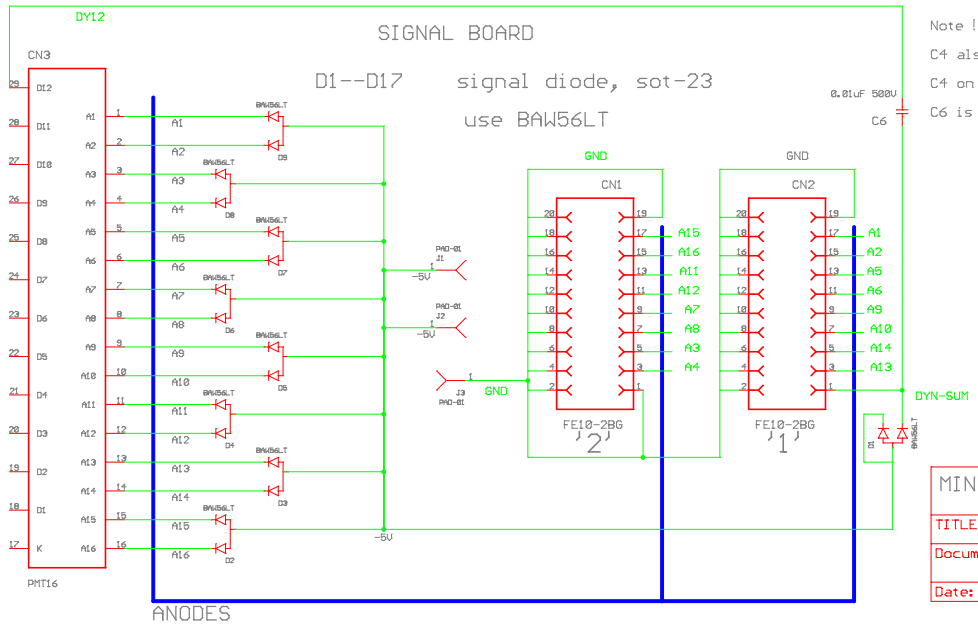

Note ! capacitor C6 was labelled as C4 on bases
C4 also exists on the BIAS board
C4 on BIAS is 0.047uF, 50 volts , 1206 smt
C6 is 0.01uF, 500 (or 200) volts, 1206 smt

MINOS project-----Karol Lang	
TITLE: s16c	
Document Number:	REV: 8
Date: 7/13/2001 07:43:12a	Sheet: 1/1

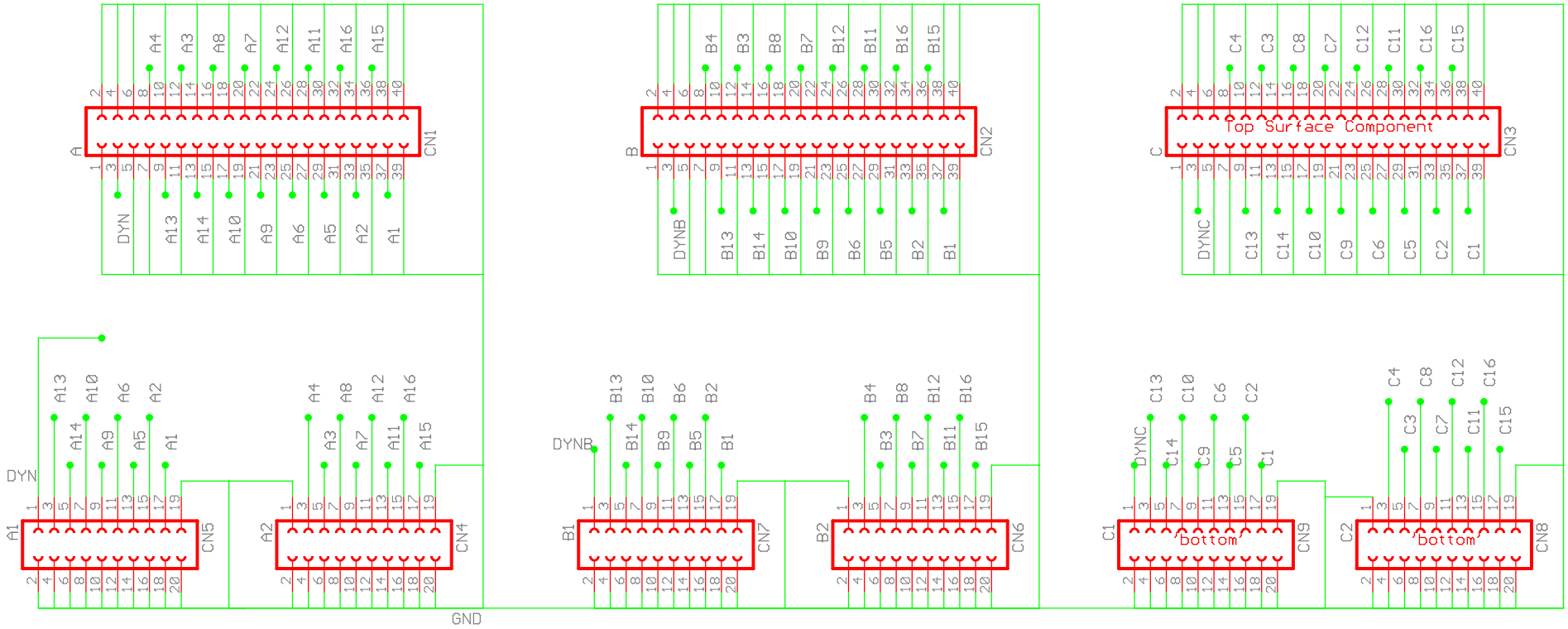

rev 1 changed position of 20 pins to inline config
rev 2
rev 3
rev 4 moved 20 pin connectors to use retainers etc.
rev 5 replaced connector locator holes with vias --7/26/00

TITLE: M16	
Document Number:	REV: 5
Date: 9/14/2000 09:57:06a	Sheet: 1/1

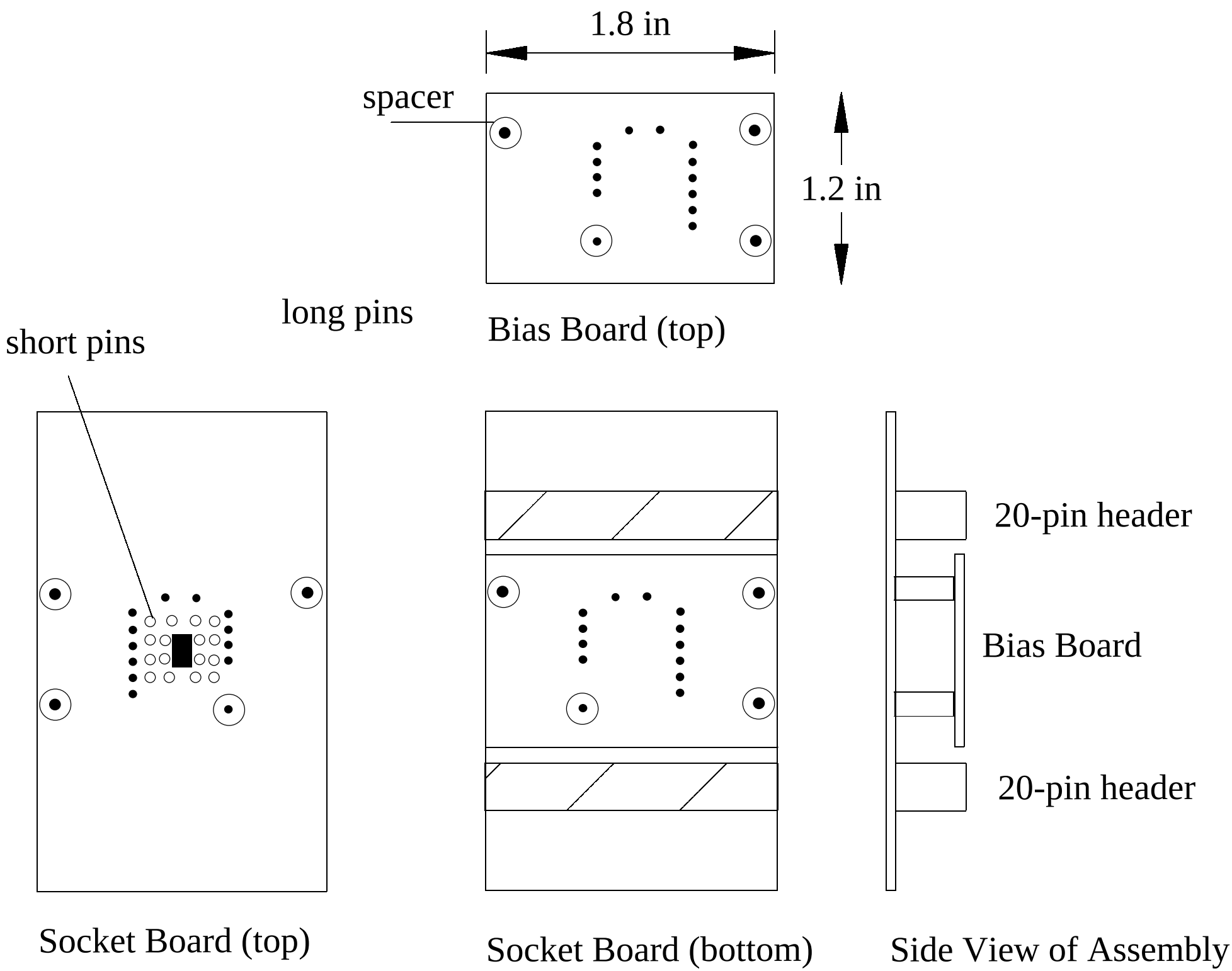
1.8 in
spacer
1.2 in
long pins
Bias Board (top)
short pins
20-pin header
Bias Board
20-pin header
Socket Board (top)
Socket Board (bottom)
Side View of Assembly

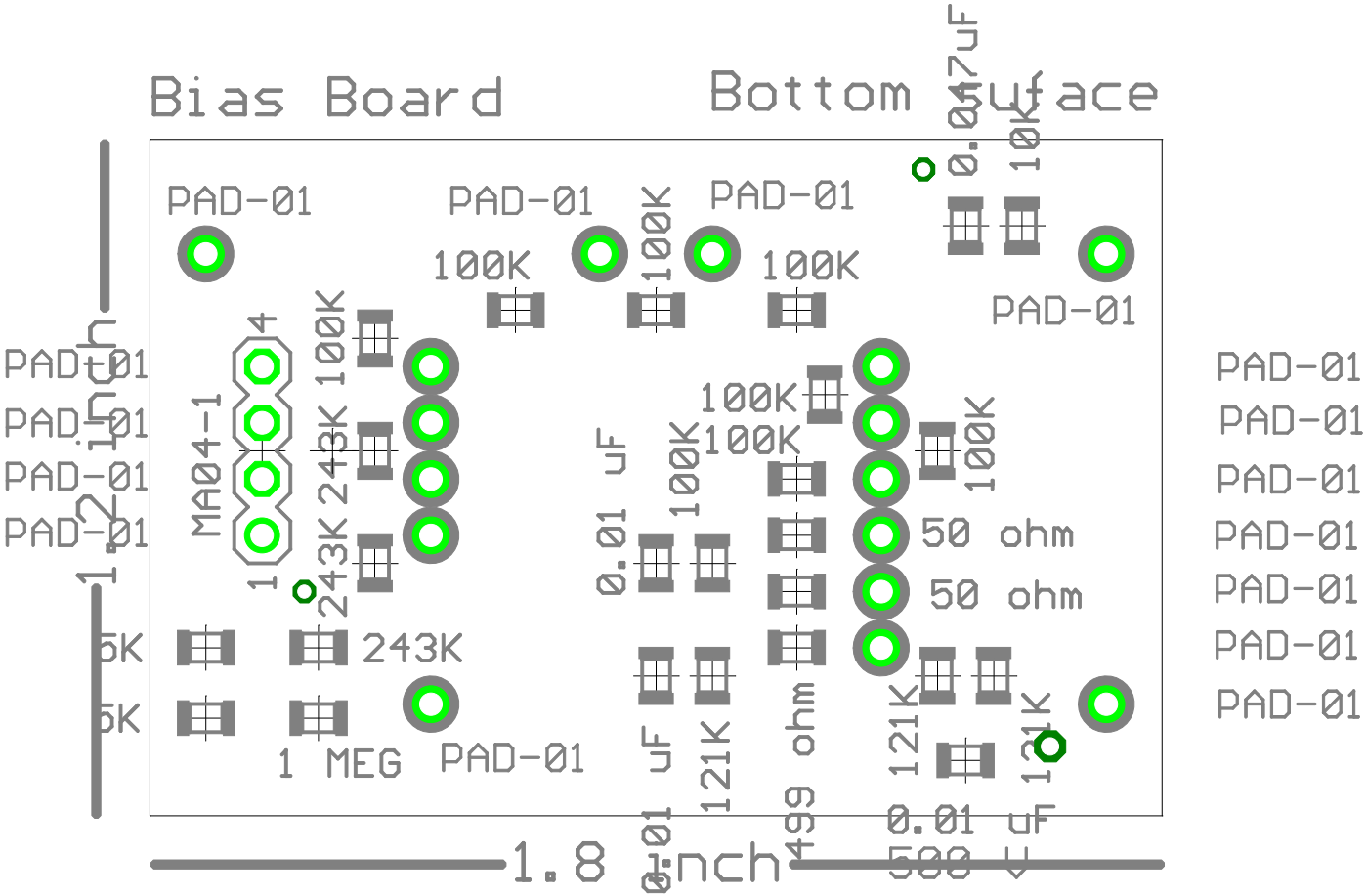
Bias Board
Bottom Surface
PAD-01
100K
MA04-1
243K
1 MEG
0.01 uF
121K
499 ohm
50 ohm
0.01 uF
500 V
1.8 inch
1.2 inch

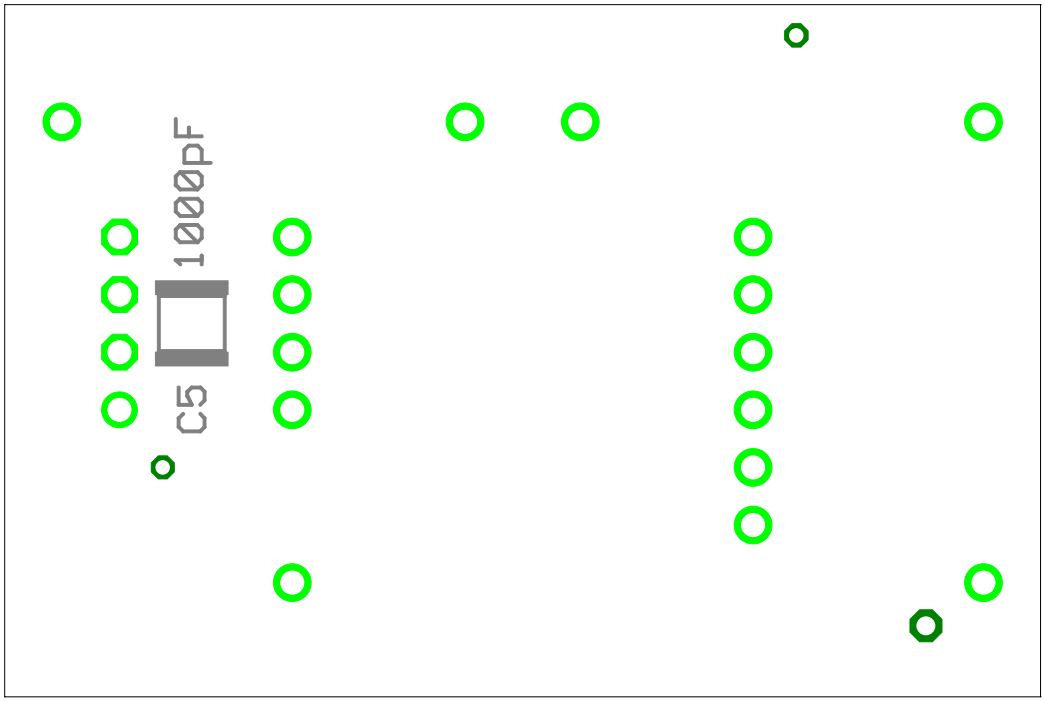
C5
1000pF

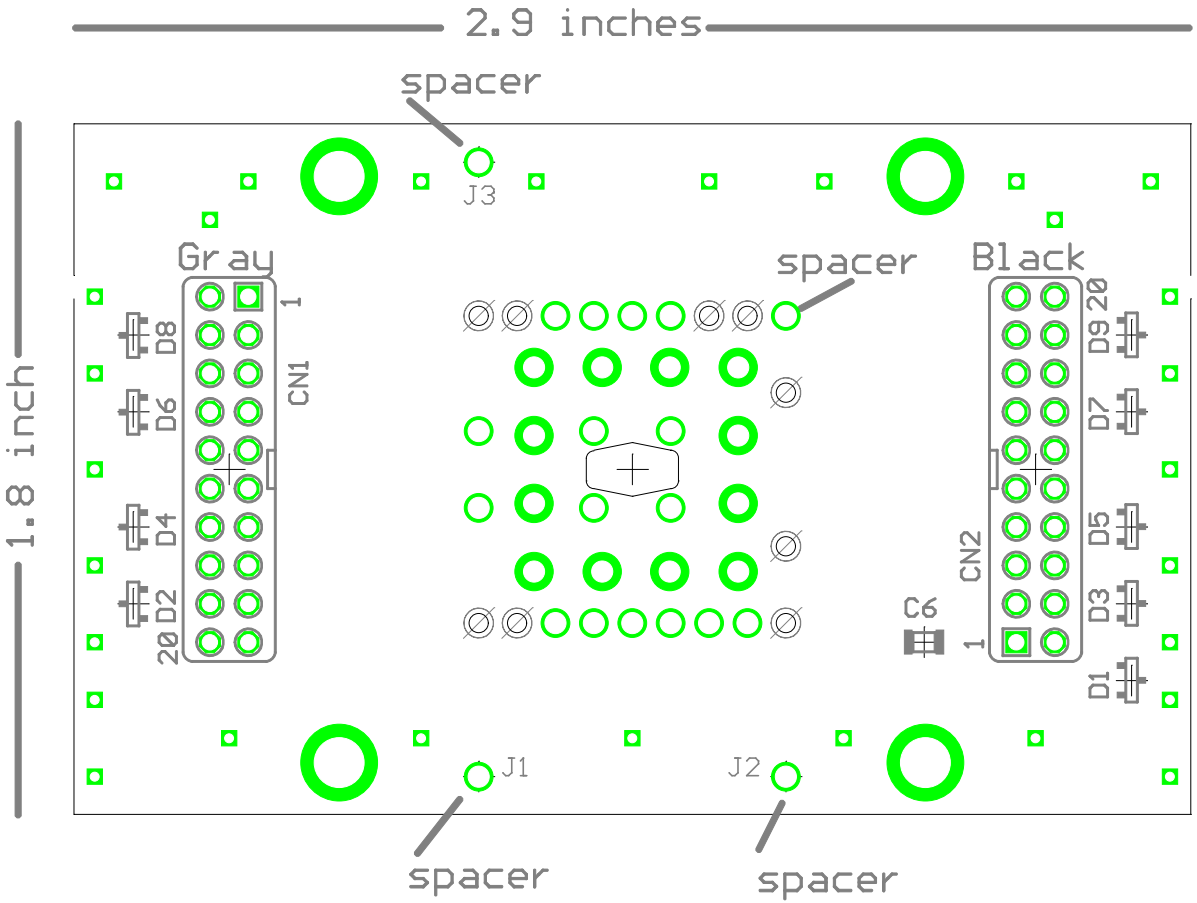

the spacers are on bottom of board

the 20-pin headers inserted from other side of board

all other components attached or inserted this side

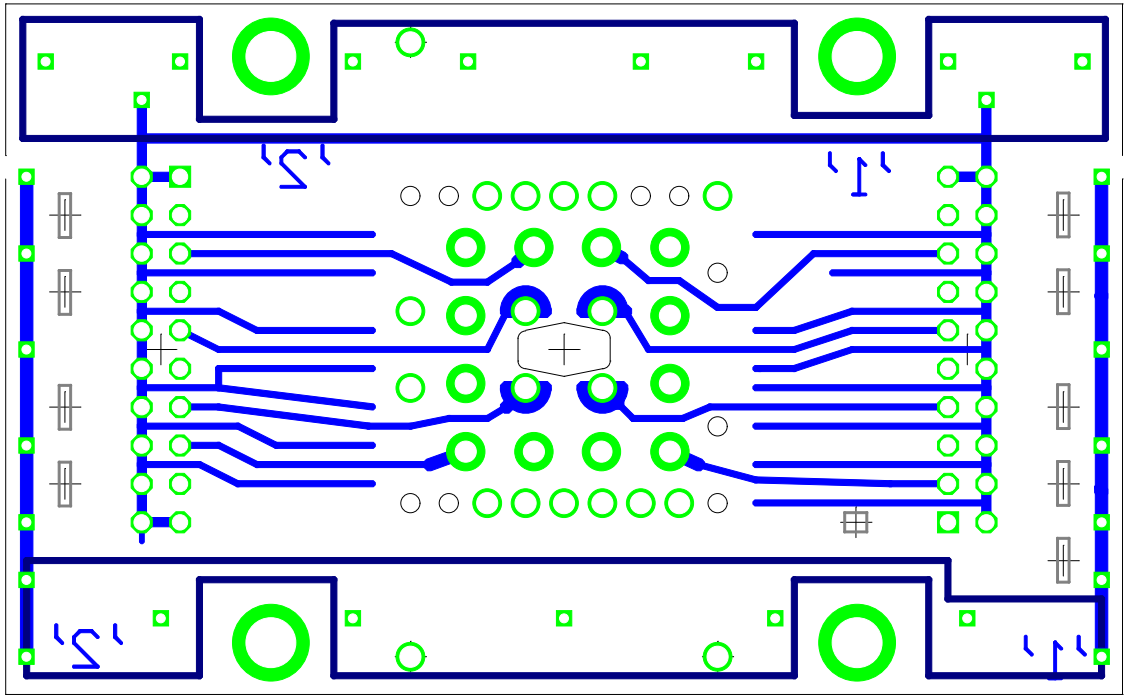

9/21/2001 02:23:44p f=2 C:\Program Files\Eagle\Lang-proj\S16\s16c.brd

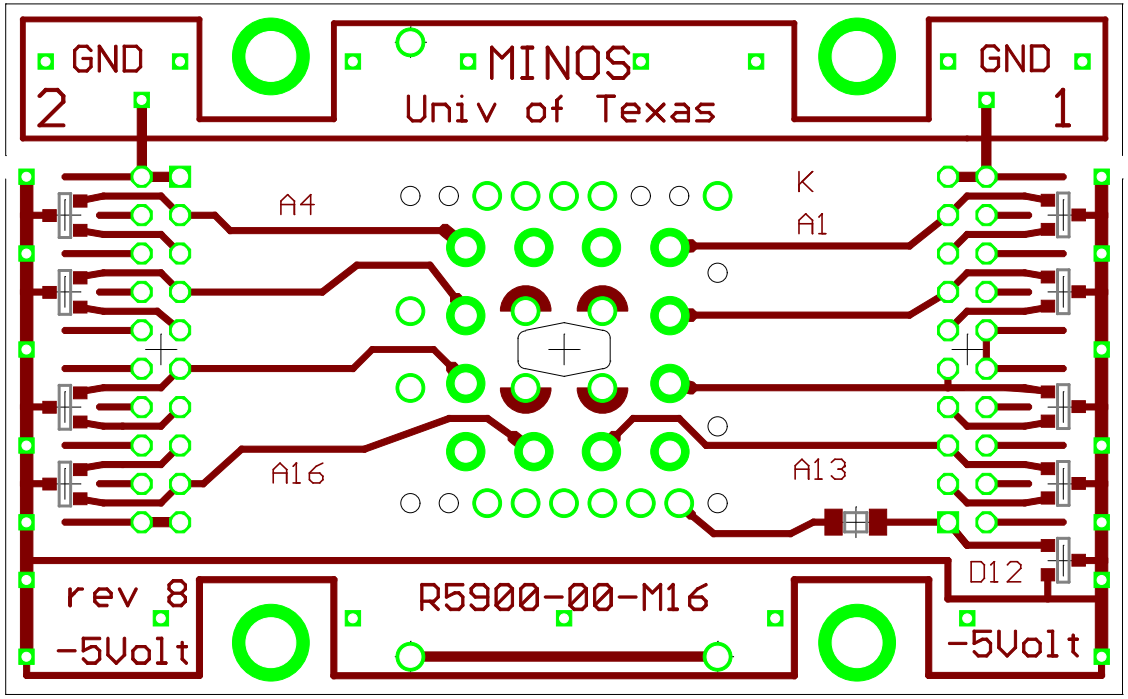

9/21/2001 02:23:03p f=2 C:\Program Files\Eagle\Lang-proj\S16\s16c.brd

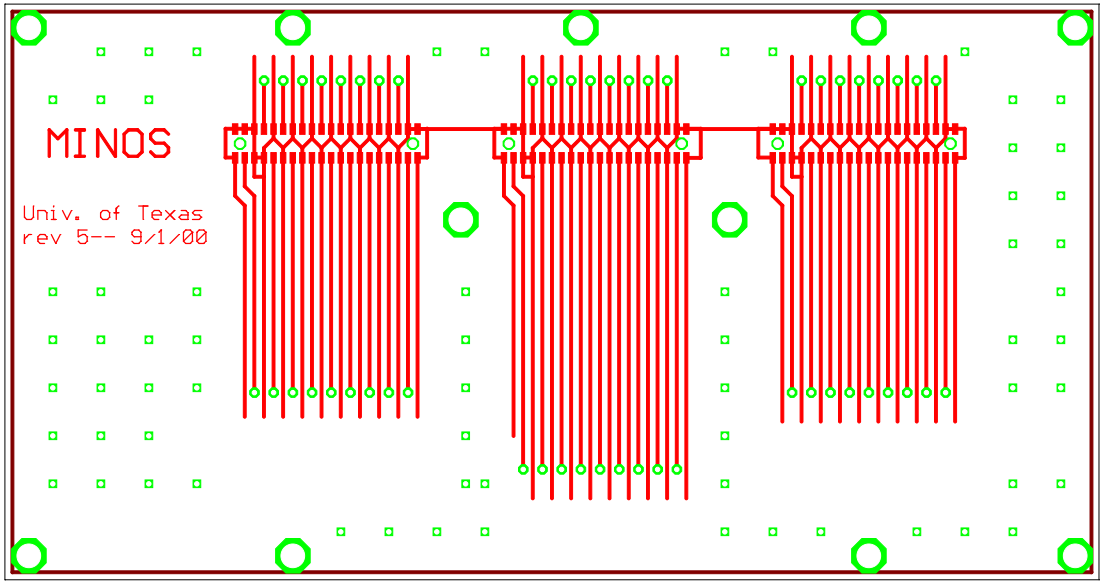

8/22/2001 09:45:46a C:\Program Files\EAGLE\Lang-proj\M16\M16.brd

EAGLE Version 3.55 Copyright (c) 1988-1998 CadSoft

Partlist exported from B16.brd at 9/15/2000 01:36:51p

Part	Value	Package	Library	Position (inch)	Orientation
C1	0.01 uF	1206	smd2	(0.00 -0.15)	R90
C2	0.01 uF	1206	smd2	(0.00 -0.35)	R90
C3	0.01 uF	1206	smd2	(0.55 -0.50)	R180
C4	0.047uF	1206	smd2	(0.55 0.45)	R90
C5	1000pF	1812B	SMD	(-0.58 0.05)	R90
(bottom)					
J1	PAD-01	PAD-01	connect	(-0.40 -0.10)	R0
J2	PAD-01	PAD-01	connect	(-0.40 0.00)	R0
J3	PAD-01	PAD-01	connect	(-0.40 0.10)	R0
J4	PAD-01	PAD-01	connect	(-0.40 0.20)	R0
J5	PAD-01	PAD-01	connect	(-0.10 0.40)	R0
J6	PAD-01	PAD-01	connect	(0.10 0.40)	R0
J7	PAD-01	PAD-01	connect	(0.40 0.20)	R0
J8	PAD-01	PAD-01	connect	(0.40 0.10)	R0
J9	PAD-01	PAD-01	connect	(0.40 0.00)	R0
J10	PAD-01	PAD-01	connect	(0.40 -0.10)	R0
J11	PAD-01	PAD-01	connect	(0.40 -0.20)	R0
J12	PAD-01	PAD-01	connect	(0.40 -0.30)	R0
J13	PAD-01	PAD-01	connect	(-0.40 -0.40)	R0
J14	PAD-01	PAD-01	connect	(-0.80 0.40)	R0
J15	PAD-01	PAD-01	connect	(0.80 -0.40)	R0
J16	PAD-01	PAD-01	connect	(0.80 0.40)	R0
R1	243K	1206	smd2	(-0.60 -0.30)	R180
R2	243K	1206	smd2	(-0.50 -0.15)	R270
R3	243K	1206	smd2	(-0.50 0.05)	R270
R4	100K	1206	smd2	(-0.50 0.25)	R270
R5	100K	1206	smd2	(-0.25 0.30)	R180
R6	100K	1206	smd2	(0.00 0.30)	R180
R7	100K	1206	smd2	(0.25 0.30)	R180
R8	100K	1206	smd2	(0.30 0.15)	R90
R9	100K	1206	smd2	(0.50 0.05)	R90
R10	100K	1206	smd2	(0.25 0.00)	R0
R11	100K	1206	smd2	(0.10 -0.15)	R90
R12	121K	1206	smd2	(0.10 -0.35)	R90
R13	121K	1206	smd2	(0.50 -0.35)	R270
R14	121K	1206	smd2	(0.60 -0.35)	R270
R15	50 ohm	1206	smd2	(0.25 -0.10)	R0
R16	50 ohm	1206	smd2	(0.25 -0.20)	R0
R17	500 ohm	1206	smd2	(0.25 -0.30)	R0
R18	1 MEG	1206	smd2	(-0.60 -0.42)	R180
R19	5K	1206	SMD	(-0.80 -0.30)	R0
R20	5K	1206	SMD	(-0.80 -0.42)	R0
R21	10K	1206	smd2	(0.65 0.45)	R270
SV1	MA04-1	MA04-1	CON-LSTB	(-0.70 0.05)	R90

Please note that J1 ----J16 are part of the PMT16 assembly on socket board.
They are the Mill-Max pin receptacles #0039-2-xxxxxxxxxxxxxx (long pins)

EAGLE Version 3.55 Copyright (c) 1988-1998 CadSoft

Partlist exported from s16c.brd at 9/18/2000 09:58:49a

Part	Value	Package	Library	Position (inch)	Orientation
C4	0.01uF 200V	1206	smd2	(0.80 -0.50)	R0
CN1	FE10-2BG	FE10-2	CON-LSTA	(-1.05 0.00)	R270 (20-pin header)
CN2	FE10-2BG	FE10-2	CON-LSTA	(1.05 0.00)	R90 (20-pin header)
CN3	PMT16	PMT16	pmt16aa	(0.00 0.00)	R0
D1	BAW56LT	SOT-23	SMD	(1.30 -0.55)	R90
D2	BAW56LT	SOT-23	SMD	(-1.30 -0.35)	R270
D3	BAW56LT	SOT-23	SMD	(1.30 -0.35)	R90
D4	BAW56LT	SOT-23	SMD	(-1.30 -0.15)	R270
D5	BAW56LT	SOT-23	SMD	(1.30 -0.15)	R90
D6	BAW56LT	SOT-23	SMD	(-1.30 0.15)	R270
D7	BAW56LT	SOT-23	SMD	(1.30 0.15)	R90
D8	BAW56LT	SOT-23	SMD	(-1.30 0.35)	R270
D9	BAW56LT	SOT-23	SMD	(1.30 0.35)	R90
J1	PAD-01	PAD-01	connect	(-0.40 -0.80)	R0
J2	PAD-01	PAD-01	connect	(0.40 -0.80)	R0
J3	PAD-01	PAD-01	connect	(-0.40 0.80)	R0

Please note that J1,J2,J3 are part of the CN3 assembly and will be soldered at the B16 board.
Also note that 13 pins (outer pins) will also be soldered at the B16 boards. The 16 short pins
in the center of this board should also be soldered to the S16 board.
All pins are inserted through the front of the S16 board.

CN1,CN2 are inserted from the bottom side.

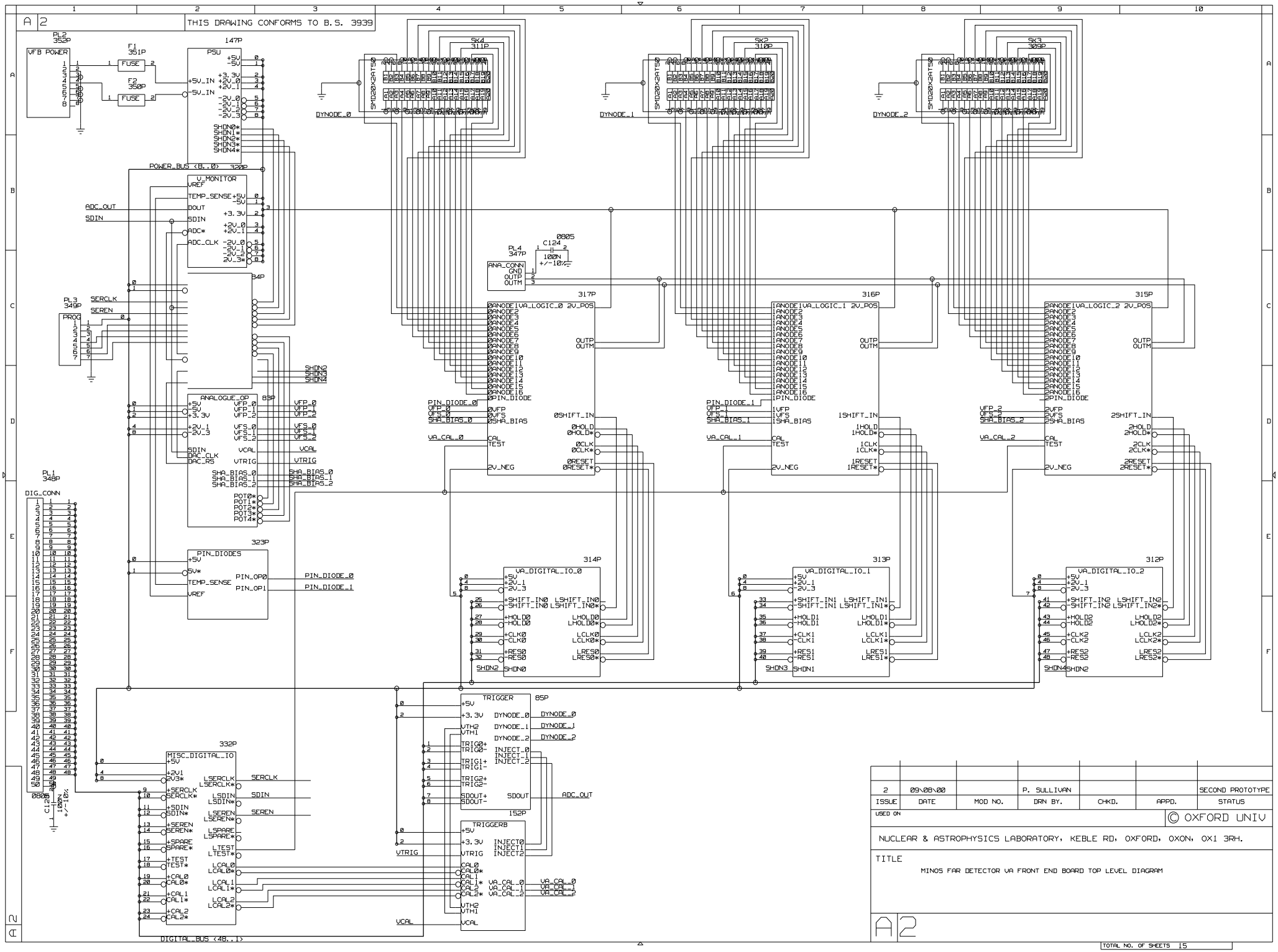
THIS DRAWING CONFORMS TO B.S. 3939
VFB POWER
PSU
V_MONITOR
ANALOGUE_OP
PROG
DIG_CONN
PIN_DIODES
MISC_DIGITAL_IO
VA_LOGIC_0 2V_POS
VA_LOGIC_1 2V_POS
VA_LOGIC_2 2V_POS
VA_DIGITAL_IO_0
VA_DIGITAL_IO_1
VA_DIGITAL_IO_2
TRIGGER
TRIGGERB
DYNODE_0
DYNODE_1
DYNODE_2
ADC_OUT
SDIN
SERCLK
SEREN
POWER_BUS <8..0>
DIGITAL_BUS <48..1>
SECOND PROTOTYPE
© OXFORD UNIV
NUCLEAR & ASTROPHYSICS LABORATORY, KEBLE RD, OXFORD, OXON, OX1 3RH.
TITLE
MINOS FAR DETECTOR VA FRONT END BOARD TOP LEVEL DIAGRAM
TOTAL NO. OF SHEETS 15

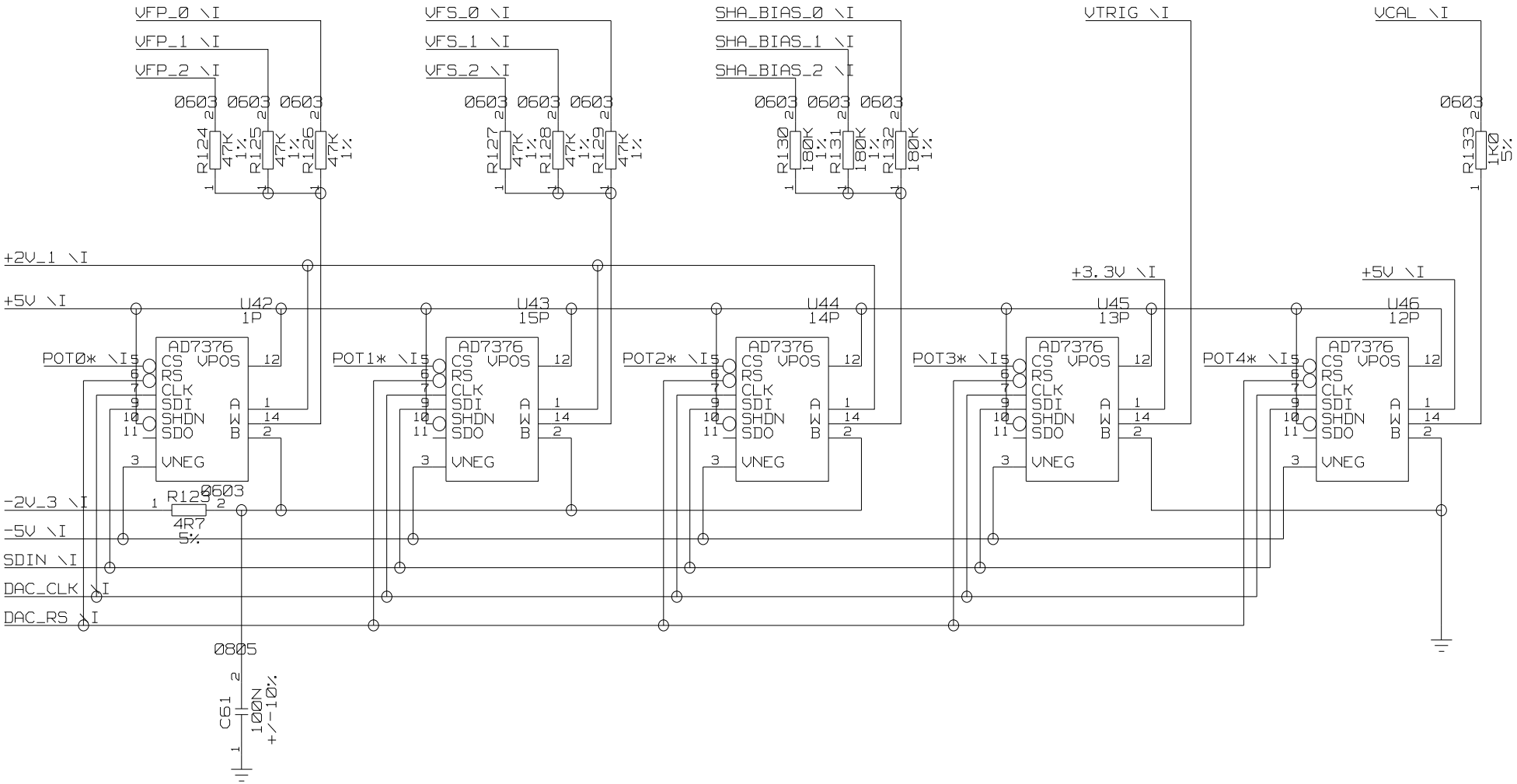

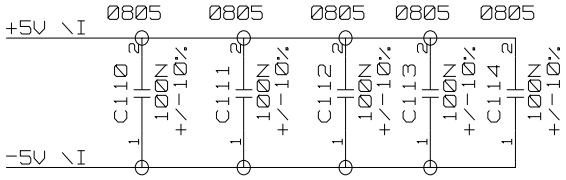

OXFORD UNIVERSITY DEPT OF NUCLEAR AND ASTROPHYSICS		
PROJECT: MINOS FAR DETECTOR		
TITLE: VFB ANALOGUE OUTPUTS		
DOCUMENT NUMBER:		
ENG: P. SULLIVAN	DATE: 09\08\03	SIZE: A4
DWN: P. SULLIVAN	SHEET 2 OF 15	REV: 2

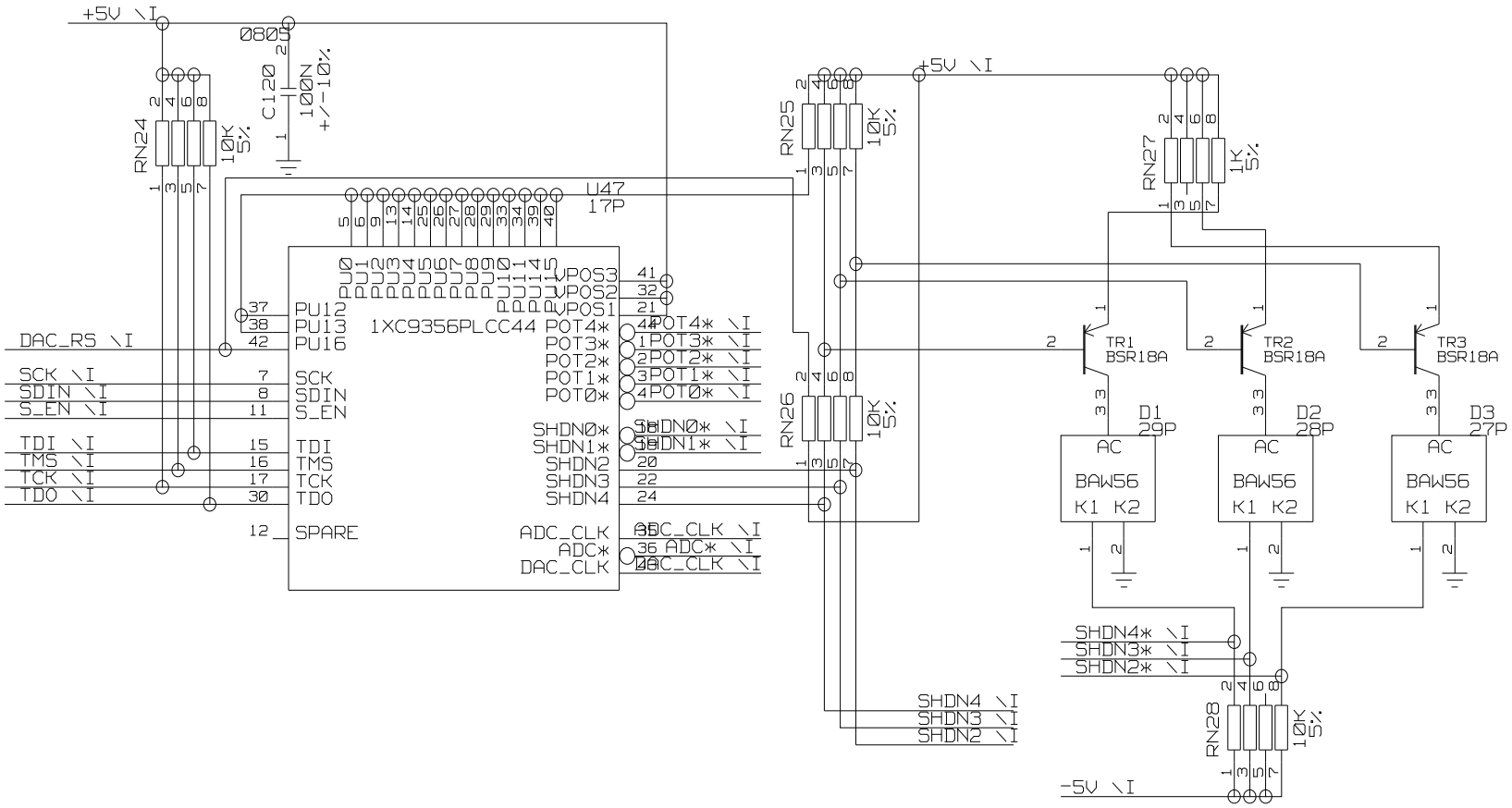

OXFORD UNIVERSITY DEPT OF NUCLEAR AND ASTROPHYSICS		
PROJECT: MINOS FAR DETECTOR		
TITLE: VFB LOCAL CONTROLLER		
DOCUMENT NUMBER:		
ENG: P. SULLIVAN	DATE: 09\08\08	SIZE: A4
DWN: P. SULLIVAN	SHEET 3 OF 15	REV: 2

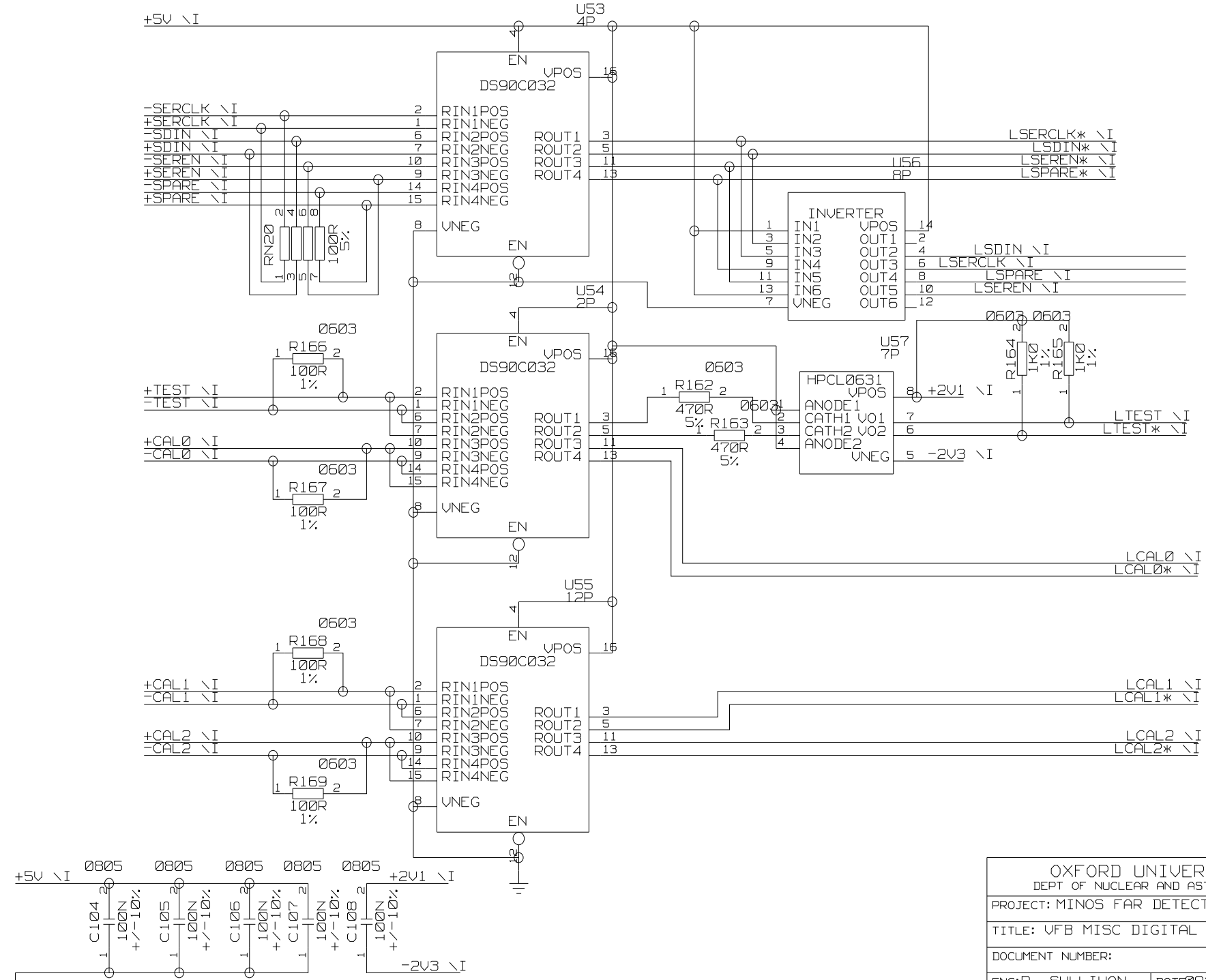

OXFORD UNIVERSITY
DEPT OF NUCLEAR AND ASTROPHYSICS

PROJECT: MINOS FAR DETECTOR		
TITLE: VFB MISC DIGITAL IO		
DOCUMENT NUMBER:		
ENG: P. SULLIVAN	DATE 09\08\00	SIZE: A4
DWN: P. SULLIVAN	SHEET 4 OF 15	REV: 2

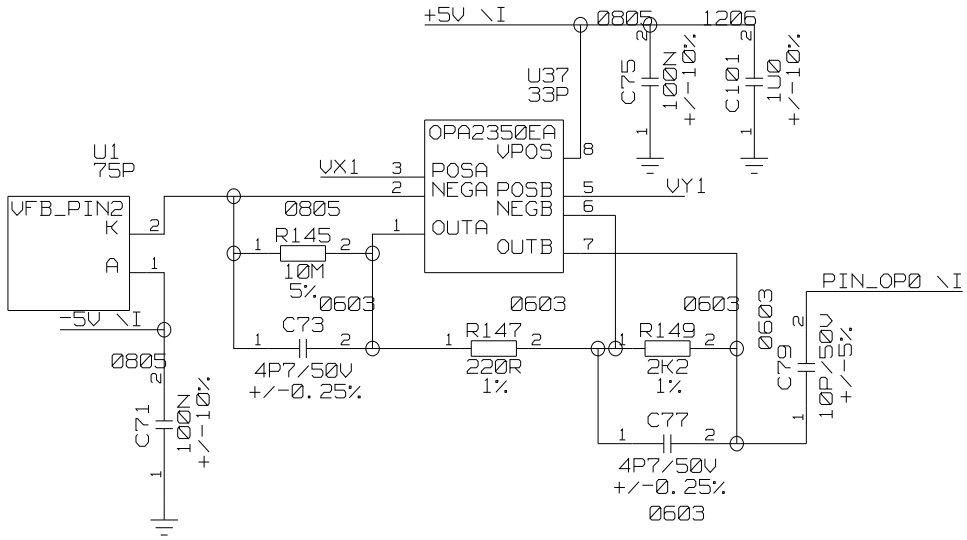

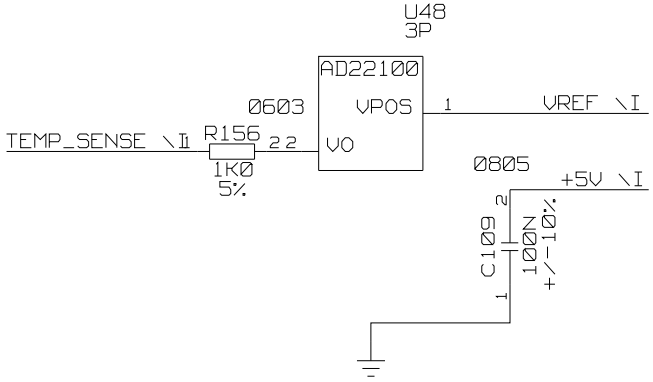

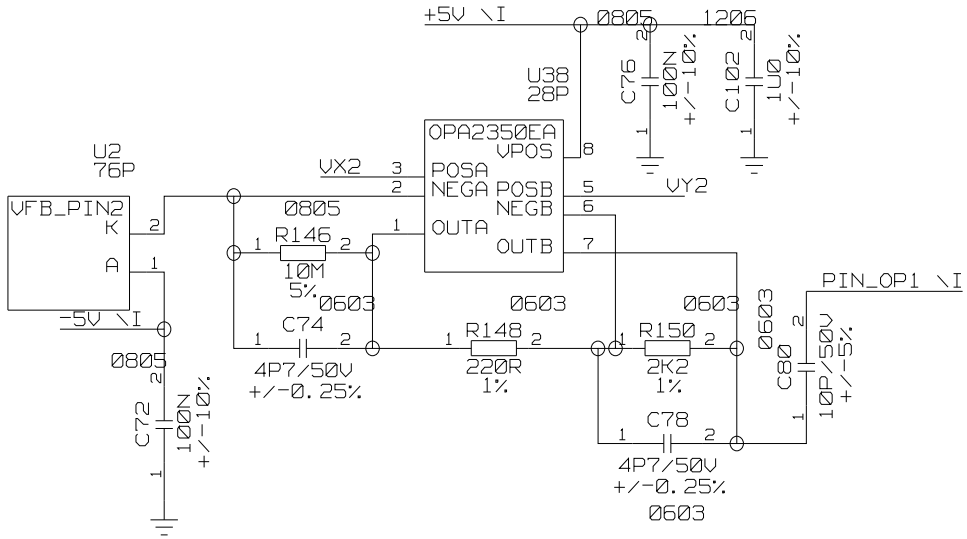

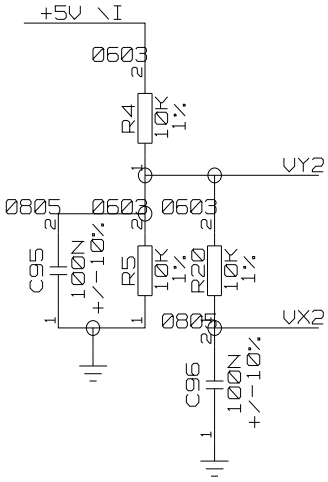

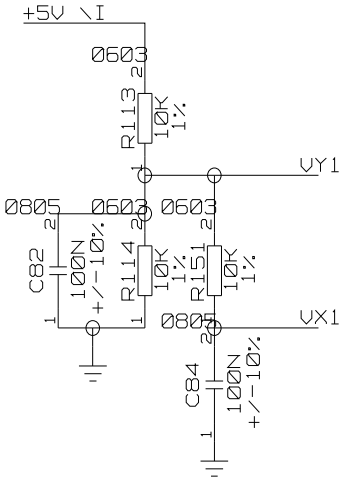

OXFORD UNIVERSITY DEPT OF NUCLEAR AND ASTROPHYSICS		
PROJECT: MINOS FAR DETECTOR		
TITLE: VFB PIN DIODE CIRCUITS		
DOCUMENT NUMBER:		
ENG: P. SULLIVAN	DATE: 09\08\03	SIZE: A4
DWN: P. SULLIVAN	SHEET 5 OF 15	REV: 1

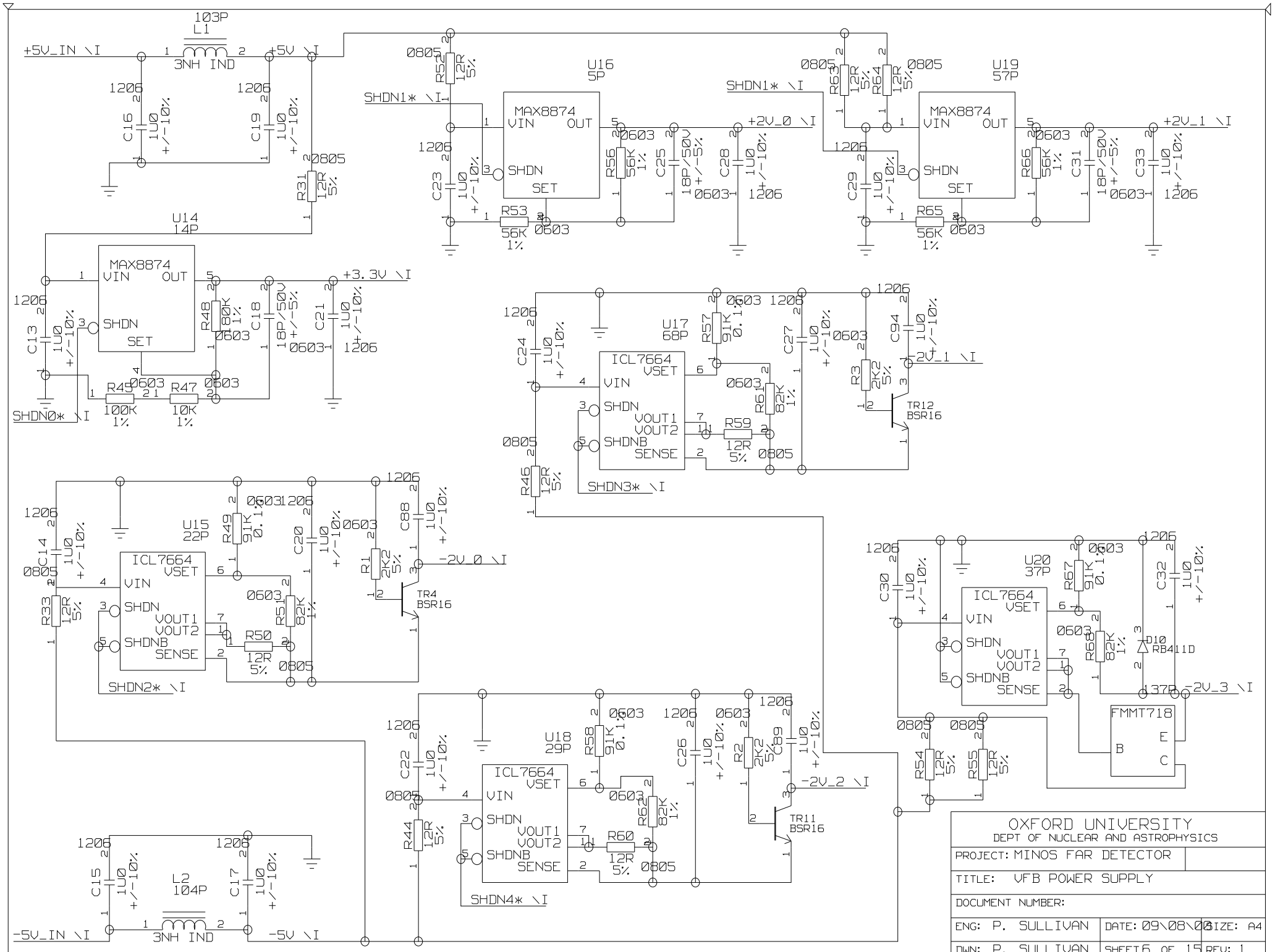
+5V_IN \I
L1
103P
3NH IND
+5V \I
C16 1U0 +/-10%
C19 1U0 +/-10%
R31 12R 5%
U14 14P
MAX8874
VIN OUT
SHDN
SET
+3.3V \I
C13 1U0 +/-10%
R48 180K 1%
C18 18P/50V +/-5%
C21 1U0 +/-10%
R45 100K 1%
R47 10K 1%
SHDN0* \I
U16 5P
SHDN1* \I
R52 12R 5%
C23 1U0 +/-10%
R53 56K 1%
R56 56K 1%
C25 18P/50V +/-5%
C28 1U0 +/-10%
+2V_0 \I
U19 57P
R63 12R 5%
R64 12R 5%
C29 1U0 +/-10%
R65 56K 1%
R66 56K 1%
C31 18P/50V +/-5%
C33 1U0 +/-10%
+2V_1 \I
U17 68P
ICL7664
VSET
VIN
SHDN
VOUT1
VOUT2
SHDNB
SENSE
C24 1U0 +/-10%
R57 91K 0.1%
R61 82K 1%
R59 12R 5%
C27 1U0 +/-10%
C94 1U0 +/-10%
R3 2K2 5%
TR12 BSR16
R46 12R 5%
SHDN3* \I
U15 22P
C14 1U0 +/-10%
R33 12R 5%
R49 91K 0.1%
R51 82K 1%
R50 12R 5%
C20 1U0 +/-10%
C88 1U0 +/-10%
R1 2K2 5%
TR4 BSR16
-2V_0 \I
SHDN2* \I
U18 29P
R58 91K 0.1%
R62 82K 1%
R60 12R 5%
C26 1U0 +/-10%
R2 2K2 5%
C89 1U0 +/-10%
TR11 BSR16
-2V_2 \I
C22 1U0 +/-10%
R44 12R 5%
SHDN4* \I
U20 37P
R67 91K 0.1%
R68 82K 1%
C30 1U0 +/-10%
C32 1U0 +/-10%
D10 RB411D
-2V_3 \I
FMMT718
R54 12R 5%
R55 12R 5%
C15 1U0 +/-10%
C17 1U0 +/-10%
L2 104P
-5V_IN \I
-5V \I
OXFORD UNIVERSITY
DEPT OF NUCLEAR AND ASTROPHYSICS
PROJECT: MINOS FAR DETECTOR
TITLE: VFB POWER SUPPLY
DOCUMENT NUMBER:
ENG: P. SULLIVAN
DATE: 09\08\03
SIZE: A4
DWN: P. SULLIVAN
SHEET 6 OF 15
REV: 1

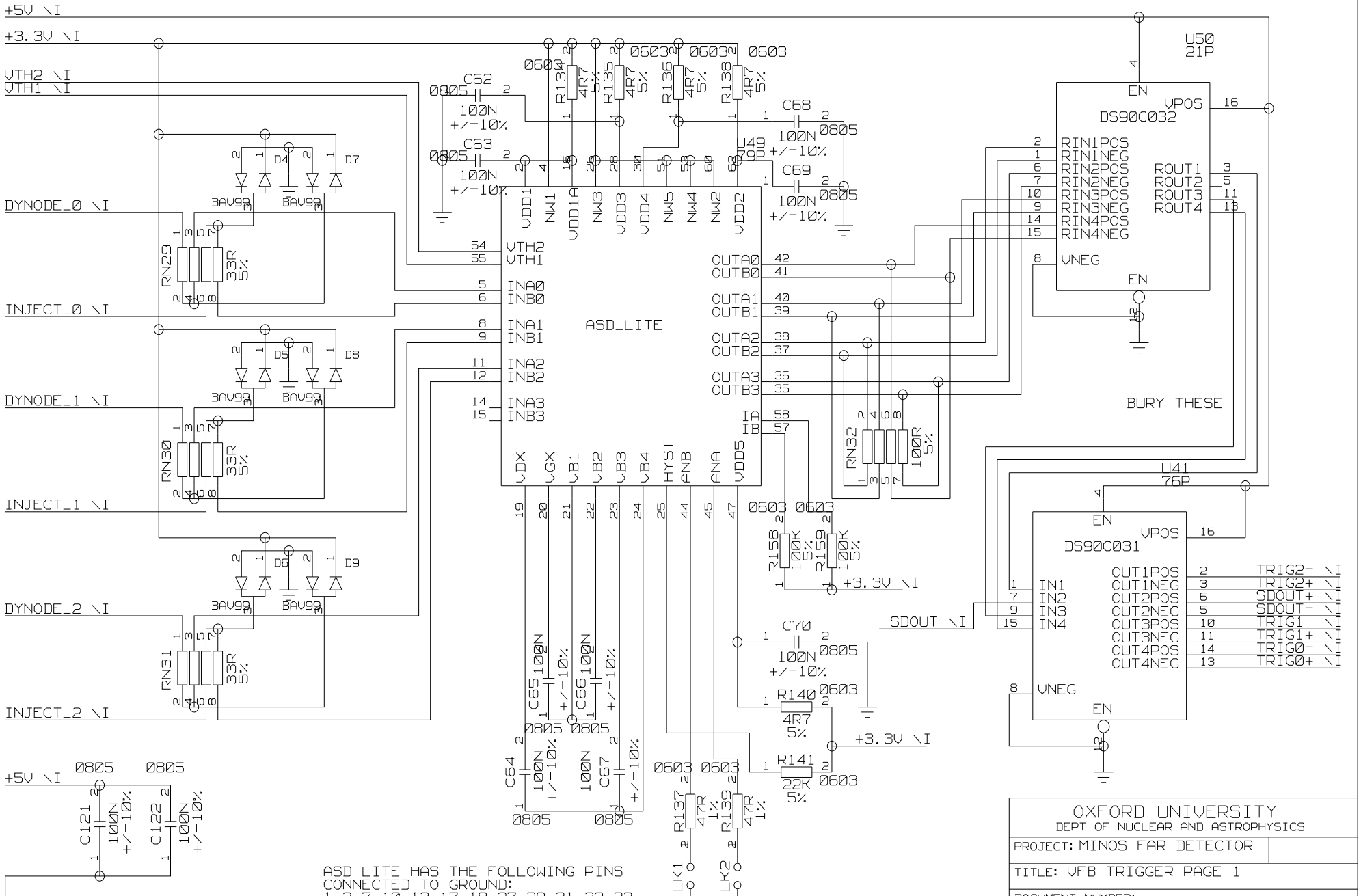

ASD LITE HAS THE FOLLOWING PINS CONNECTED TO GROUND:
1, 3, 7, 10, 13, 17, 18, 27, 29, 31, 32, 33, 34, 43, 46, 48, 49, 50, 52, 56, 59, 61, 63, 64

OXFORD UNIVERSITY DEPT OF NUCLEAR AND ASTROPHYSICS		
PROJECT: MINOS FAR DETECTOR		
TITLE: VFB TRIGGER PAGE 1		
DOCUMENT NUMBER:		
ENG: P. SULLIVAN	DATE: 09\08\00	SIZE: A4
DWN: P. SULLIVAN	SHEET 7 OF 15	REV: 2

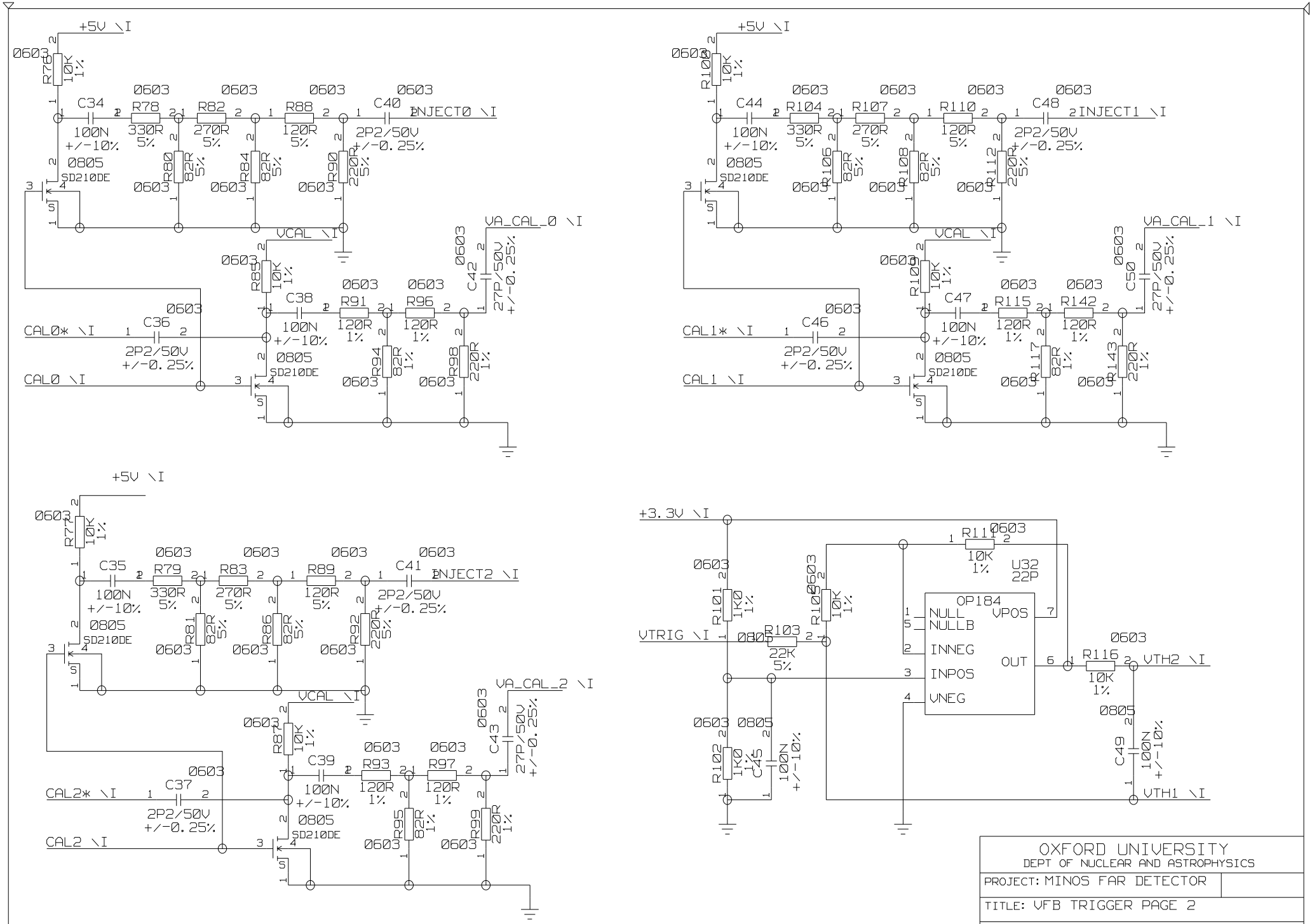

OXFORD UNIVERSITY DEPT OF NUCLEAR AND ASTROPHYSICS		
PROJECT: MINOS FAR DETECTOR		
TITLE: VFB TRIGGER PAGE 2		
DOCUMENT NUMBER:		
ENG: P. SULLIVAN	DATE: 09\08\00	SIZE: A4
DWN: P. SULLIVAN	SHEET 8 OF 15	REV: 2

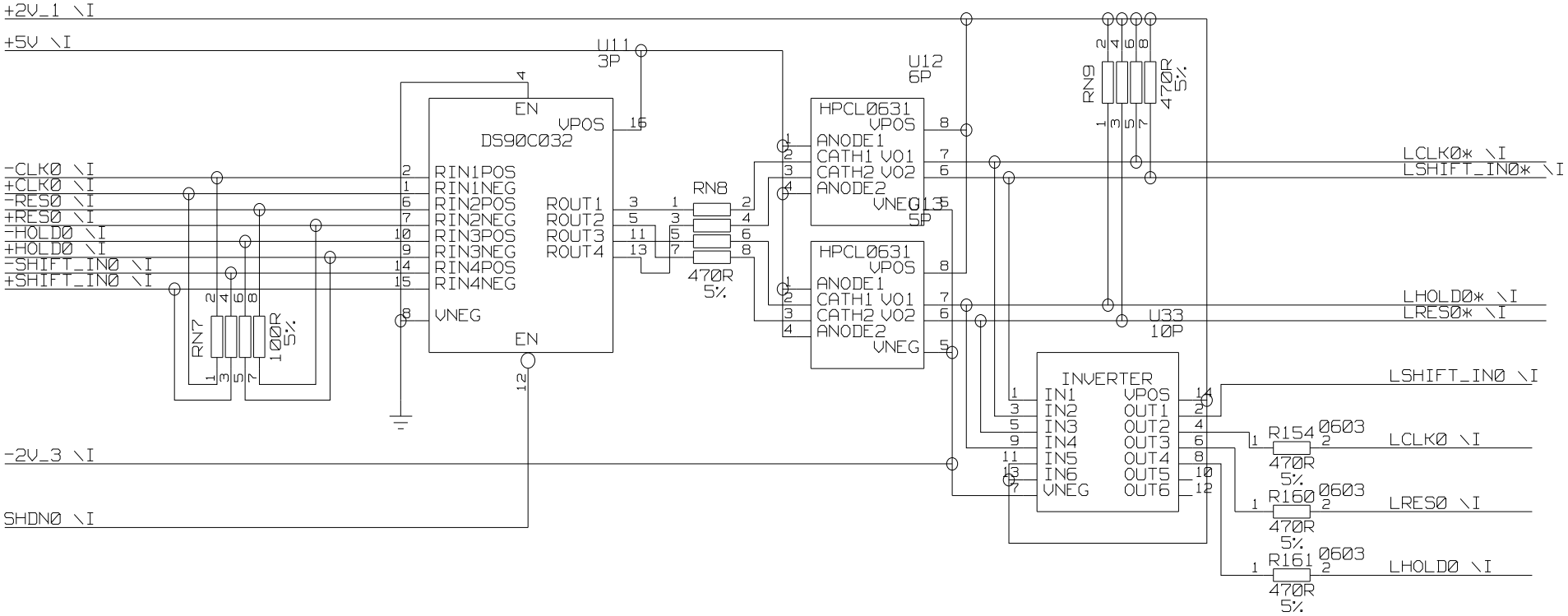

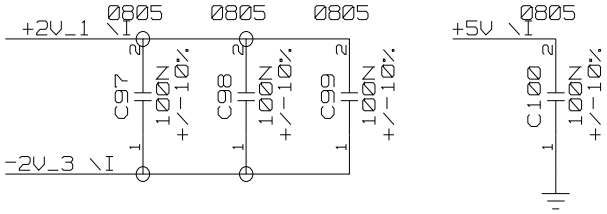

OXFORD UNIVERSITY DEPT OF NUCLEAR AND ASTROPHYSICS		
PROJECT: MINOS FAR DETECTOR		
TITLE: VA CHIP 0 DIGITAL INPUTS		
DOCUMENT NUMBER:		
ENG: P. SULLIVAN	DATE: 09\08\00	SIZE: A4
DWN: P. SULLIVAN	SHEET 9 OF 15	REV: 2

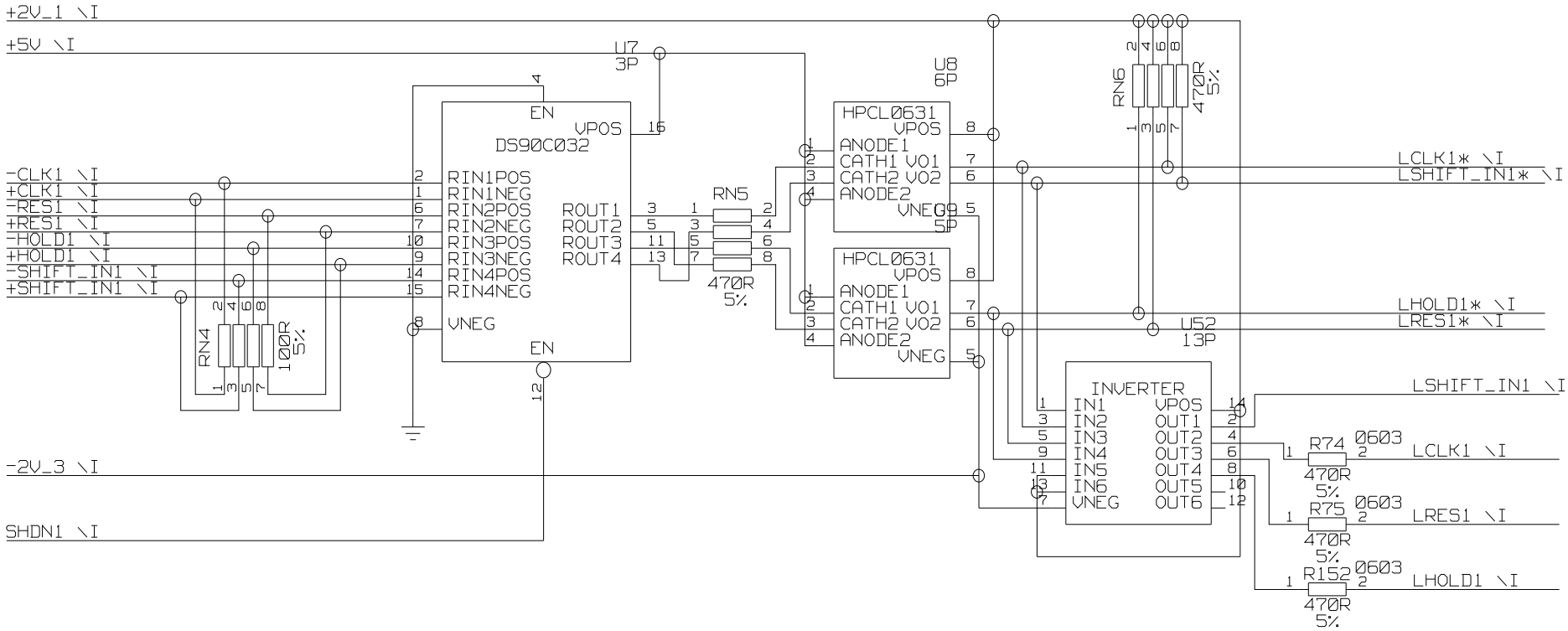

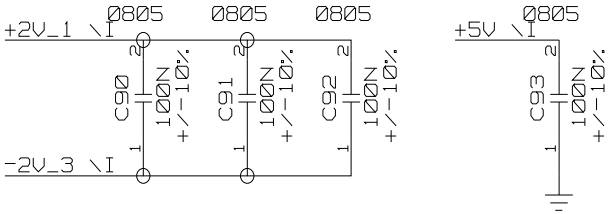

OXFORD UNIVERSITY DEPT OF NUCLEAR AND ASTROPHYSICS		
PROJECT: MINOS FAR DETECTOR		
TITLE: VA CHIP 1 DIGITAL INPUTS		
DOCUMENT NUMBER:		
ENG: P. SULLIVAN	DATE: 09\08\00	SIZE: A4
DWN: P. SULLIVAN	SHEET 10 OF 15	REV: 2

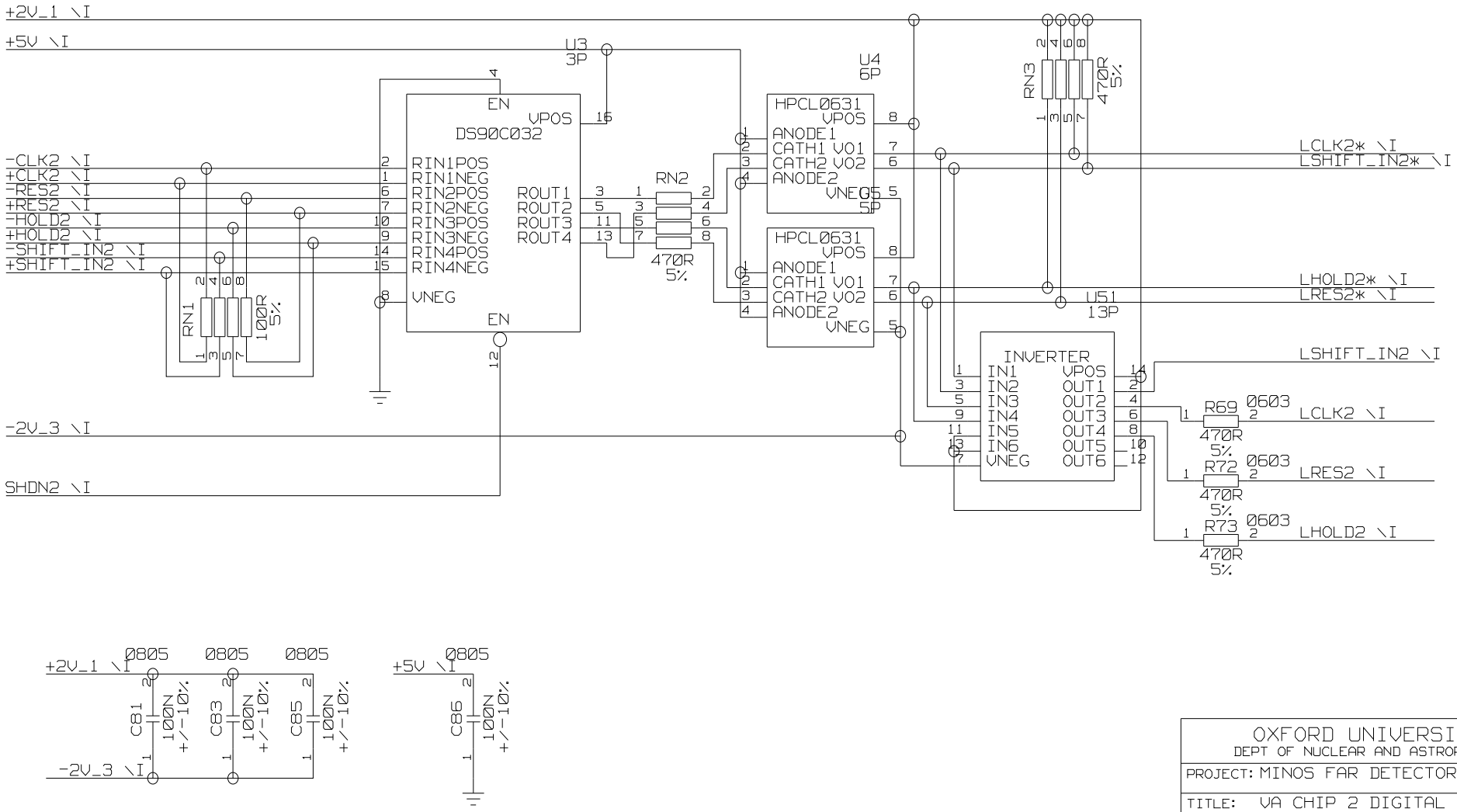

OXFORD UNIVERSITY DEPT OF NUCLEAR AND ASTROPHYSICS		
PROJECT: MINOS FAR DETECTOR		
TITLE: VA CHIP 2 DIGITAL INPUTS		
DOCUMENT NUMBER:		
ENG: P. SULLIVAN	DATE: 09\08\00	SIZE: A4
DWN: P. SULLIVAN	SHEET 11 OF 15	REV: 2

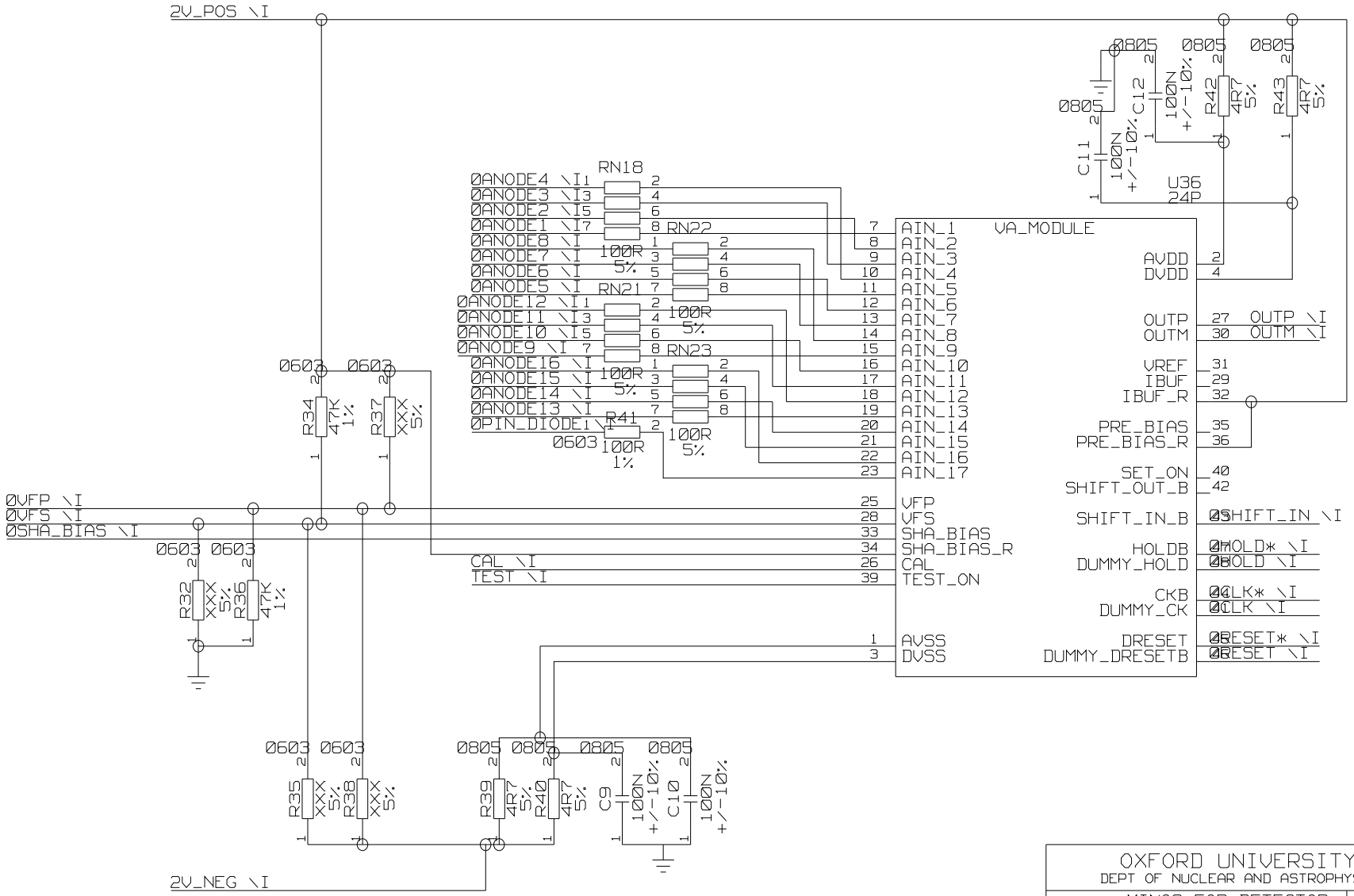

OXFORD UNIVERSITY
DEPT OF NUCLEAR AND ASTROPHYSICS

PROJECT: MINOS FAR DETECTOR	
TITLE: VA CHIP 0 LOGIC	
DOCUMENT NUMBER:	
ENG: P. SULLIVAN	DATE: 09\08\03 SIZE: A4
DWN: P. SULLIVAN	SHEET 12 OF 15 REV: 2

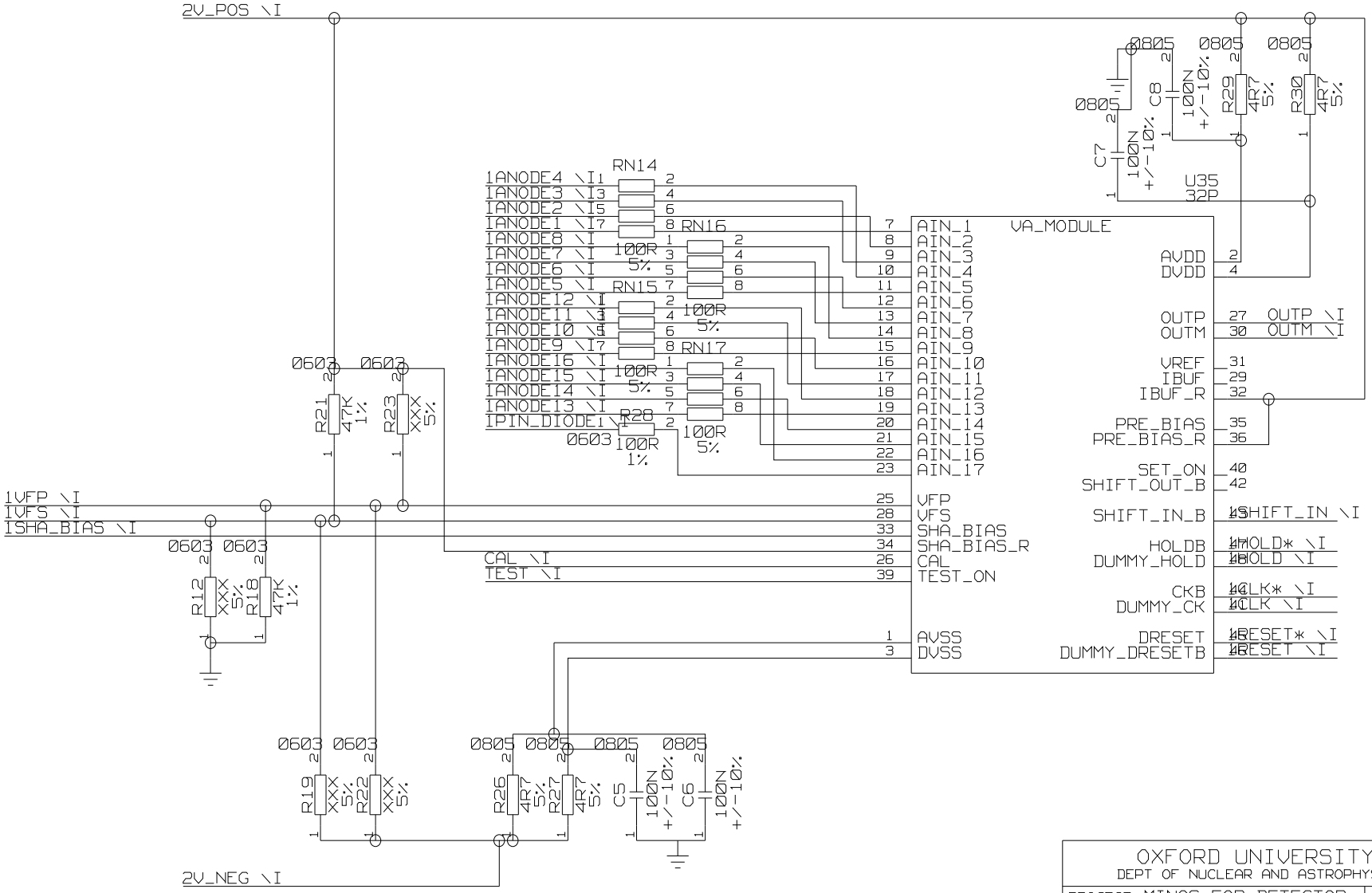

OXFORD UNIVERSITY
DEPT OF NUCLEAR AND ASTROPHYSICS

PROJECT: MINOS FAR DETECTOR		
TITLE: VA CHIP 1 LOGIC		
DOCUMENT NUMBER:		
ENG: P. SULLIVAN	DATE: 09\08\00	SIZE: A4
DWN: P. SULLIVAN	SHEET 13 OF 15	REV: 2

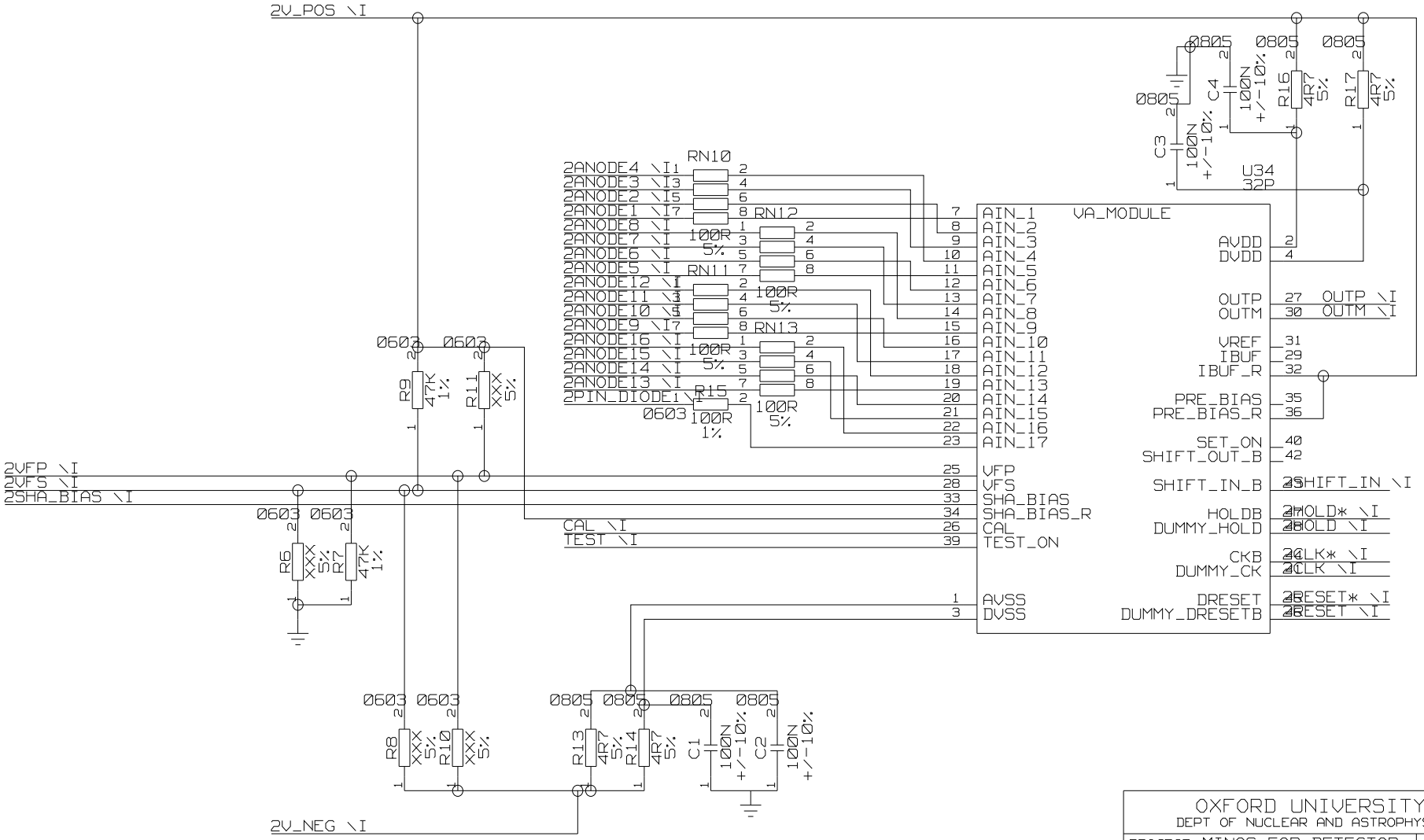

OXFORD UNIVERSITY
DEPT OF NUCLEAR AND ASTROPHYSICS

PROJECT: MINOS FAR DETECTOR		
TITLE: VA CHIP 2 LOGIC		
DOCUMENT NUMBER:		
ENG: P. SULLIVAN	DATE: 09\08\00	SIZE: A4
DWN: P. SULLIVAN	SHEET 14 OF 15	REV: 2

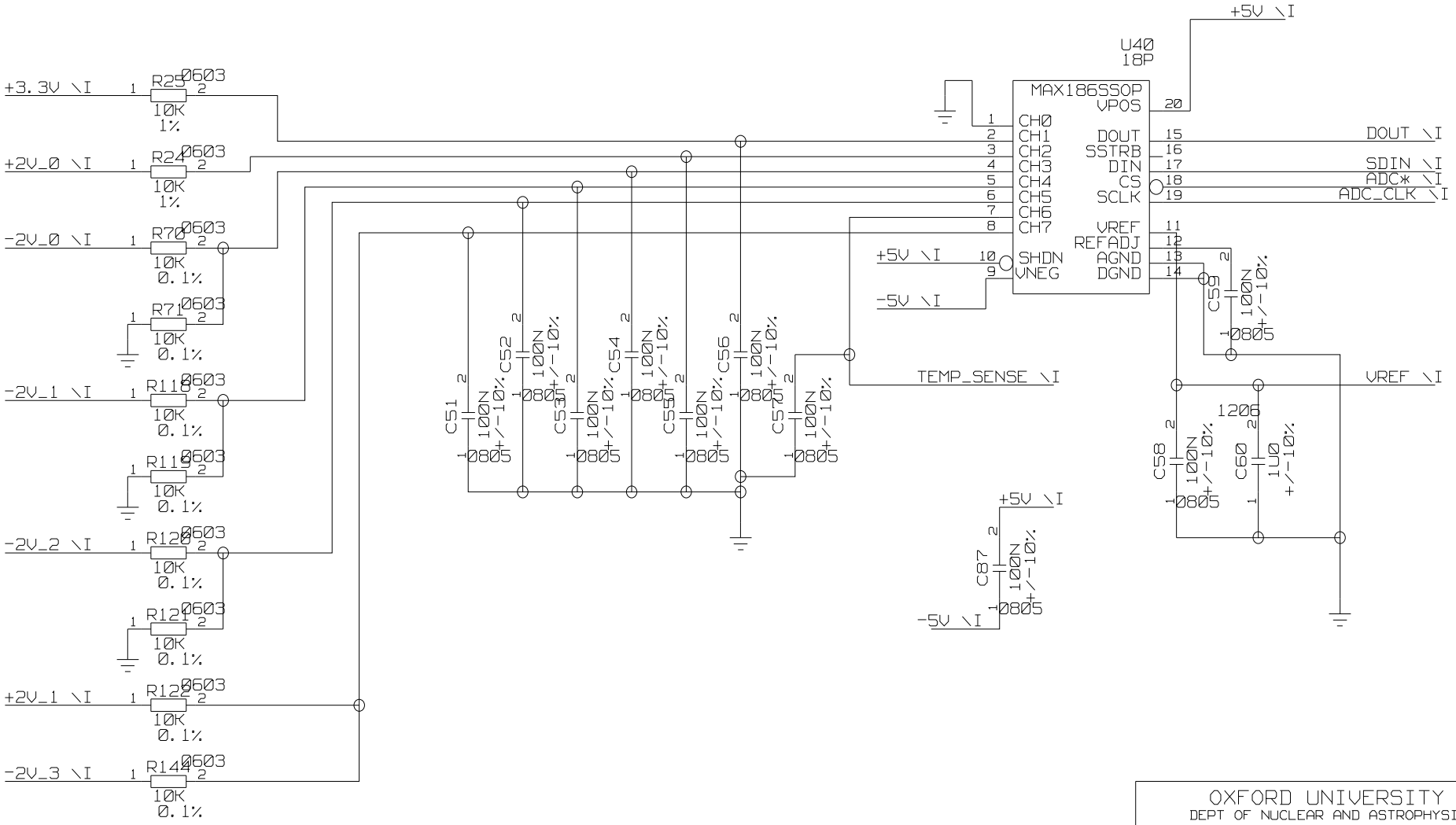

OXFORD UNIVERSITY DEPT OF NUCLEAR AND ASTROPHYSICS		
PROJECT: MINOS FAR DETECTOR		
TITLE: VFB VOLTAGE MONITORING		
DOCUMENT NUMBER:		
ENG: P. SULLIVAN	DATE: 09\08\00	SIZE: A4
DWN: P. SULLIVAN	SHEET 15 OF 15	REV: 2

Title:	**VFB Partslist 1 0f 2**				
Design:	**MINOS_VFB1 Iss2**				
Date:	**27-Mar-01**				
Template:	**/cadence5/98/tools/interface/bom.template**				
Issue Status:	**Production 3**				
Notes	List for items supplied by Nustart Electronics				
Derived From:	VFB Partslist 1 0f 2 Iss.2 dated 14 Mar 01				
Change History:	Incorporates change 10 Ref. VFB Partslist Update Log Dated 27 Mar 2001				
Ref	**Description**	**Manufacturer**	**Part Number**	**Quantity**	**Change Info**
C36,C37,C40	CAPACITOR_0603-2P2/50V,		Farnell 721-888	6	
C41,C46,C48	5%				
C73,C74,	CAPACITOR_0603-4P7/50V,		Farnell 721-920	4	
C77,C78	5%				
C79,C80	CAPACITOR_0603-10P/50V,	KEMET	C0603C100C5GAC	2	
	close tolerance (0.25pF)				
C18,C25,	CAPACITOR_0603-18P/50V,		Farnell 721-992	3	
C31,	5%				
C42,C43,C50	CAPACITOR_0603-33P/50V,	Philips 0.27 for 10	Farnell 722-029	3	
	5%				
C1-C12,	CAPACITOR_0805-470N,	Philips 0.55 for 10	Farnell 335-2043	76	
C34,C35,C38,C39,	10%				
C44,C45,C47,C49,					
C51-C59,C61-C72,					
C75,C76,C81-C87,					
C90-C93,C95-C100,					
C104-C114,					
C120-C124					
C13-C17	CAPACITOR_1206-2u2,	Philips 0.80/10	Farnell 335-2092	15	
C19,C21-C24	+/-10%				

C28-C30					
C32,C33					
C20,C26,C27	CAPACITOR_1206-10uf	Philips 0.38/1	Farnell 318-8954	9	
C88,C89,C94					
C60,C101,					
C102					
D4-D9	Series Diode BAV99	Zetex(mark=A7s)	Farnell .741 000	6	
D1-D3	Comm Anode Diode BAW56	Philips (mark =A1p)	Farnell .741 863	3	
D10	Diode Shottky ZHCS1000	ZETEX(mark=ZS1)	Farnell 743-781 26.5	1	
F1,F2	Fuse & holder	Littelfuse	154500	2	
LK1,LK2	0.1" pitch 2 pin header	Molex	Farnell 511-778	2	
PL3	0.1" pitch 7 pin header	Buy for both these	20 Way Strip	1	
L1,L2	3NH_INDUCTOR	AVX (farnell p585)	L08053R3DEW	2	
RN29-RN31	RESISTOR-NET-4I_SMD-33R,	PHIA	Farnell 776-610	3	
RN10-RN18,	RESISTOR-NET-4I_SMD-100R,		Farnell 776-646	13	
RN21-RN23,	5%,PHA				
RN32					
RN1,RN4,	RESISTOR-NET-4I_SMD-120R,		Farnell 307-0130	4	
RN7,RN20	5%,PHA				
RN2,RN3,RN5,	RESISTOR-NET-4I_SMD-470R,	PHIA	Farnell 776-683	6	
RN6,RN8,RN9					
RN27	RESISTOR-NET-4I_SMD-1K,	PHIA	Farnell 776-701	1	

RN24-RN26,	RESISTOR-NET-4I_SMD-10K,	PHIA	Farnell 776-762	4	
RN28					
R6,R8,R10-R12	RESISTOR_0805- DO NOT FIT		XXXXXXX	13	
R19,R22,R23					
R32,R35,R37					
R38,R159					
R13,R26,R39	0 Ohm link 0805	MULTICOMP	Farnell 772-239	3	
R14,R16,R17,R27,	RESISTOR_0805-4R7,1%,	MULTICOMP	Farnell 321-7796	15	
R29,R30,R40,					
R42,R43,R123,					
R134-R136,					
R138,R140					
R33,R44,R46	RESISTOR_0805-12R,1%	MULTICOMP	Farnell 911-628	12	R64 Added
R50,R54,R55					
R31,R52,R63,R64					
R59,R60					
R137,R139	RESISTOR_0805-47R,5%,	MULTICOMP	Farnell 612-935	2	
R80,R81,	RESISTOR_0805-82R,1%,	MULTICOMP	Farnell 911 720	6	
R84,R86,					
R106,R108					
R15,R28,	RESISTOR_0805-100R,1%,	MULTICOMP	Farnell 911-732	3	
R41,					
R91,R93,	RESISTOR_0805-120R,1%,	MULTICOMP	Farnell 911-744	13	
R96,R97,					
R115,R142					
R88,R89,					
R110					
R166-R169					

R148,R94,R95,R117	RESISTOR_0805-150R,1%,	MULTICOMP	Farnell 911-756	4	
R98,R99,	RESISTOR_0805-220R,1%,	MULTICOMP	Farnell 911-770	6	
R143					
R90,R92,					
R112					
R82,R83,	RESISTOR_0805-270R,1%,	MULTICOMP	Farnell 911-781	3	
R107					
R78,R79,	RESISTOR_0805-330R,1%,	MULTICOMP	Farnell 91-793	3	
R104					
R147	RESISTOR_0805-430R,1%,		Farnell 321-8016	1	
R69,R72-R75,	RESISTOR_0805-470R,1%,	MULTICOMP	Farnell 911-811	11	
R152,R154					
R160-R163					
R1-R3	RESISTOR_0805-1K0,1%	MULTICOMP	Farnell 911-859	9	
R101,R102					
R133,R156					
R164,R165					
R149,R150,	RESISTOR_0805-2K2,1%,	MULTICOMP	Farnell 911-896	2	
R70,R71,	RESISTOR_0805-10K,0.1%,	MEGGIT	Farnell 433-123	8	
R118-R122,					
R144					
R4,R5,R20,R24,R25,	RESISTOR_0805-10K,1%,	MULTICOMP	Farnell 911-975	16	
R47,R76,,R77,R85,					
R87,R100,R109,R113,					
R114,R116,R151					
R141	RESISTOR_0805-22K,1%,	MULTICOMP	Farnell 912-013	1	

R158	RESISTOR_0805-27K,1%,	MULTICOMP	Farnell 912-025	1	
R53,R56,R65,R66	RESISTOR_0805-56K,1%,	MULTICOMP	Farnell 912-062	4	
R130-R132	RESISTOR_0805-62K,1%,	MULTICOMP	Farnell 321-8272	3	
R105,R111	RESISTOR_0805-91K,1%	MULTICOMP		2	
R7,R9,R18	RESISTOR_0805-100K,1%	MULTICOMP	Farnell 912-098	12	
R21,R34,R36					
R124-R129					
R45	RESISTOR_0805-100K,1%,	MULTICOMP	Farnell 912-098	1	
R103	RESISTOR_0805-110K,1%,	MULTICOMP	Farnell 321-8302	1	
R51,R61,R62,R68	RESISTOR_0805-120K,1%,	MULTICOMP	Farnell 912-104	4	
R49,R57,R58,R67	RESISTOR_0805-130K,1%	MULTICOMP	Farnell 321-8314	4	
R48	RESISTOR_0805-180K,1%,	MULTICOMP	Farnell 912-128	1	
R145,R146	RESISTOR_0805-10M,5%,CAT		Farnell 327-8890	2	
TR4,TR11,	NPN transistor SOT23 FMMT618	ZETEX(partmark=618	Farnell .549-411 31.3	3	
TR12					
U6,TR1-TR3	PNP Transistor SOT23 FMMT718	ZETEX(partmark=718	Farnell .549-447 31.1	4	
TR5-TR10	Transistor Pad		Farnell 519-984	6	
U34-U36	VA MODULE Socket Strips	Harwin M22-6122522	Farnell 307-7962	6	
U33,U51,U52,U56	INVERTER 74AC04	Various	Farnell 687-686	4	
==========	==========	==========	==========	===	

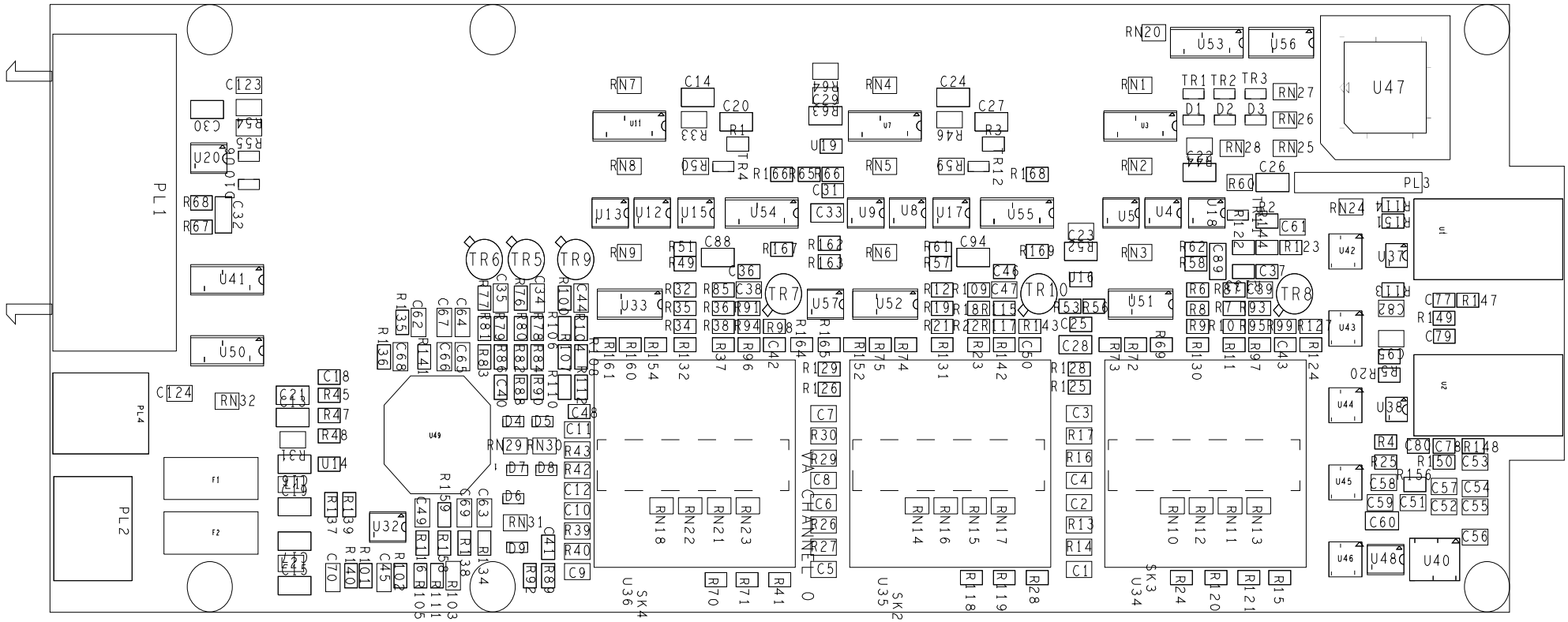
PL1
PL2
PL3
PL4
U47
U40
U49
U36
U35
U34
U1
U2
TR1
TR2
TR3
TR5
TR6
TR7
TR8
TR9
TR10
F1
F2
VA CHANNEL 0

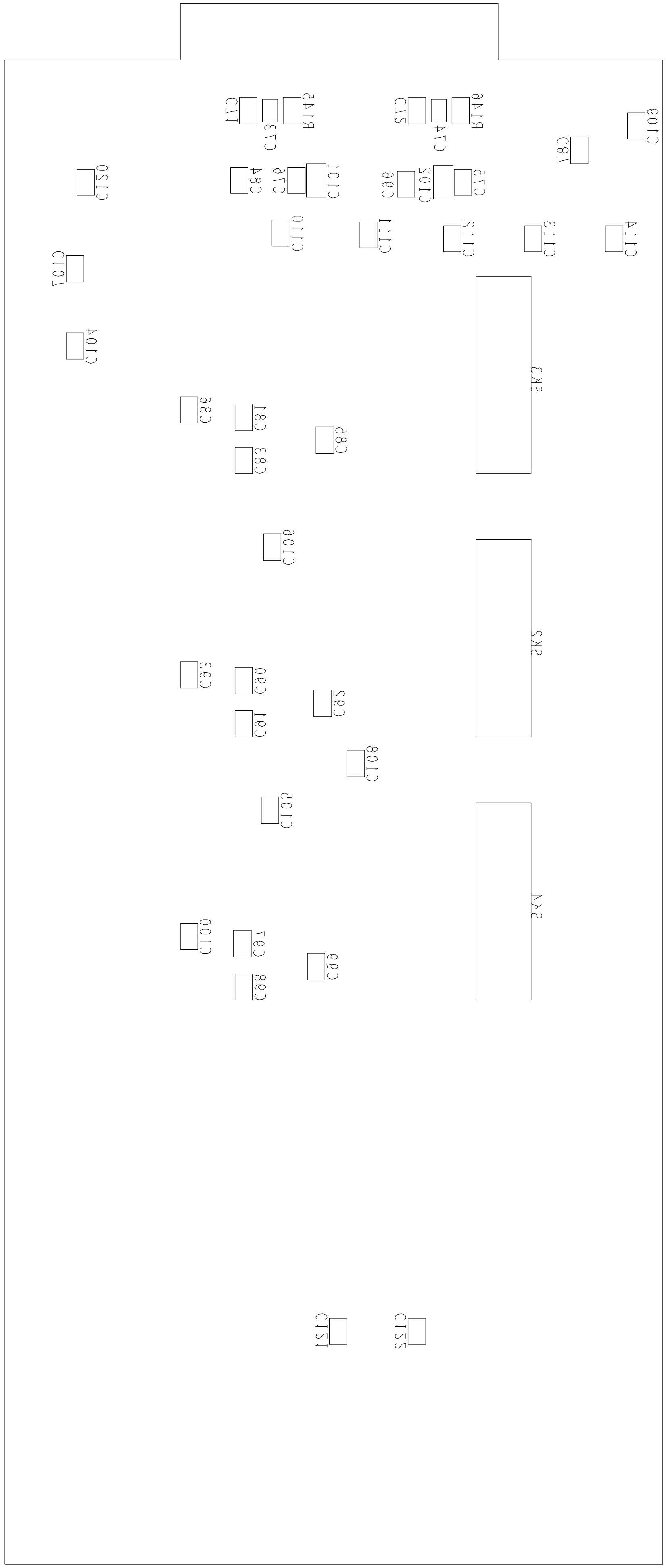
C11
C13
R145
C12
C14
R146
C109
C87
C120
C84
C16
C101
C96
C102
C15
C110
C111
C112
C113
C114
C107
C104
SK3
C86
C81
C82
C83
C106
SK2
C93
C90
C95
C91
C108
C105
SK4
C100
C97
C99
C98
C151
C152

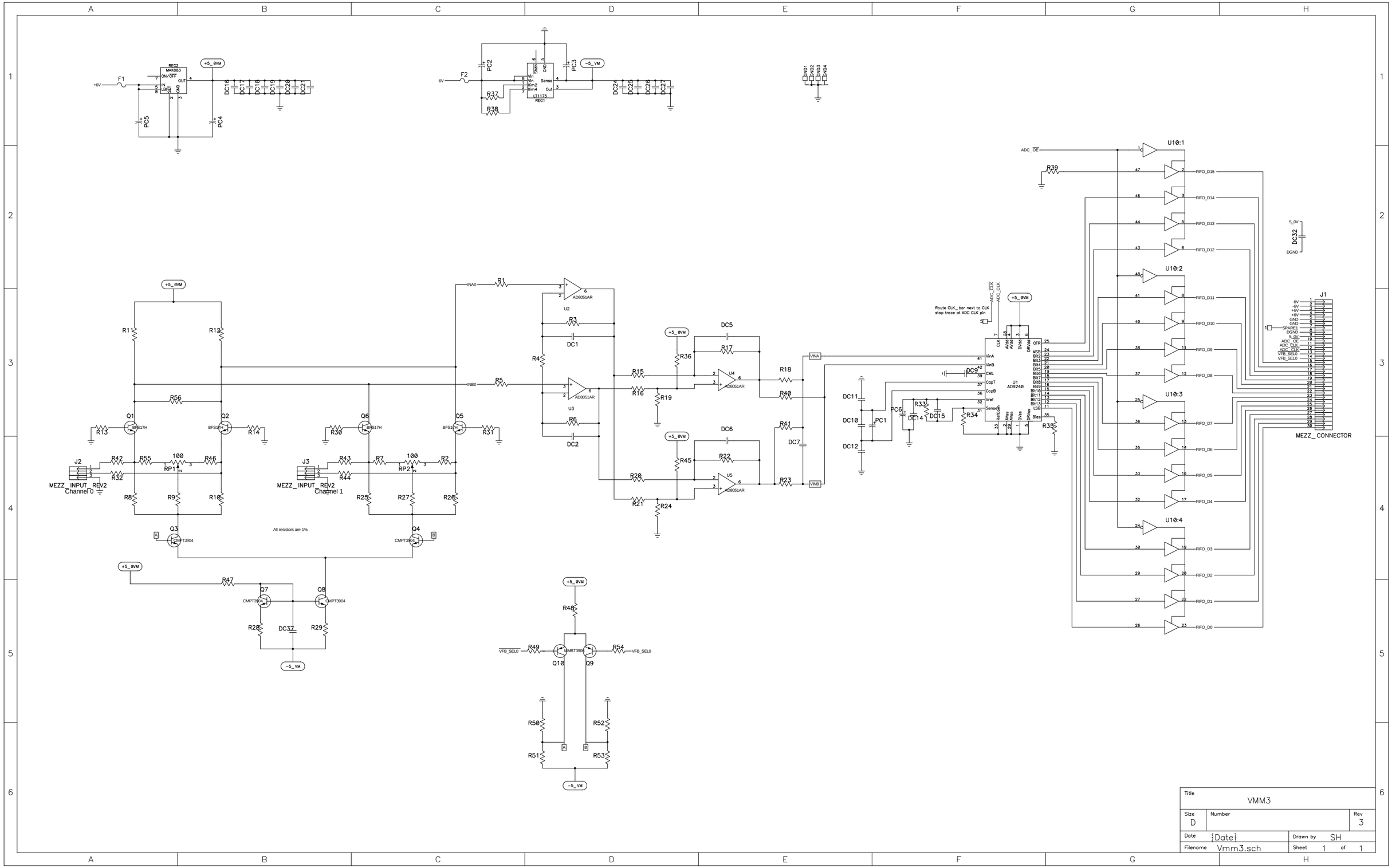

Title	VMM3
Size	D
Number	
Rev	3
Date	{Date}
Drawn by	SH
Filename	Vmm3.sch
Sheet	1 of 1

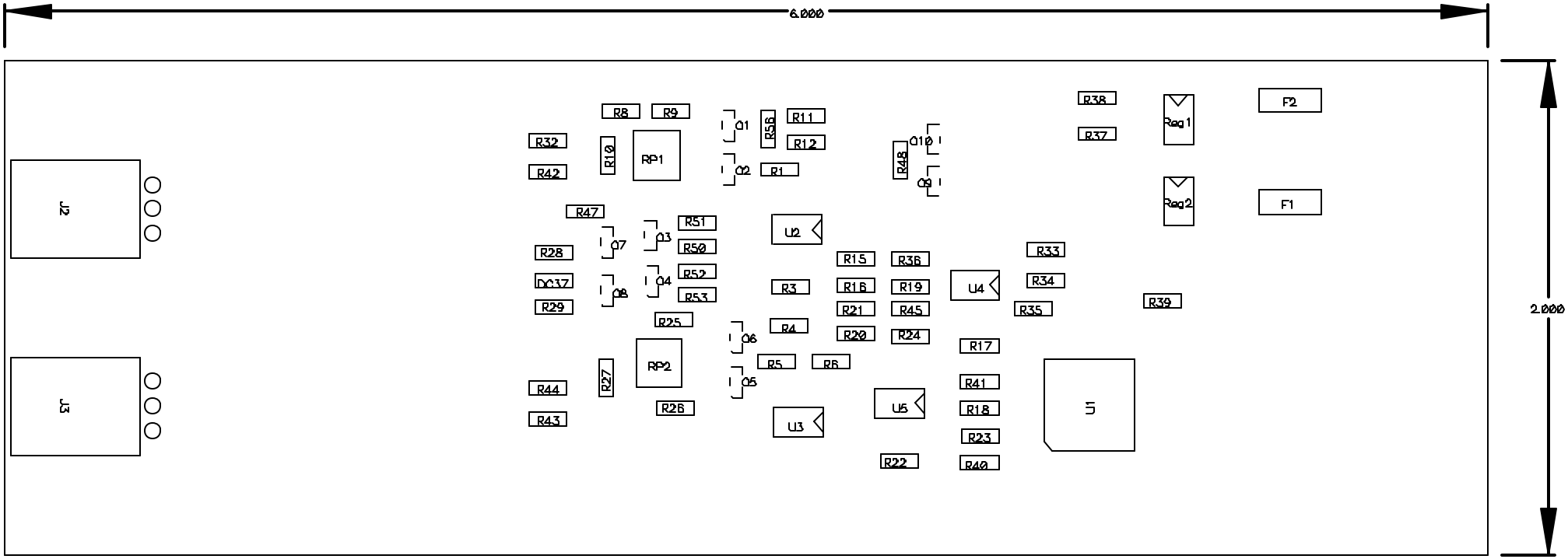
6.000
2.000
J2
J3
R32
R42
R8
R9
R10
RP1
Q1
Q2
R56
R11
R12
R1
R48
Q10
Q9
R38
R37
Reg1
Reg2
F2
F1
R47
Q7
Q3
R51
R50
R52
R53
U2
R28
DC37
R29
Q8
Q4
R25
R15
R16
R21
R20
R36
R19
R45
R24
U4
R33
R34
R35
R39
R3
R4
Q6
Q5
RP2
R27
R44
R43
R26
R5
R6
U3
U5
R17
R41
R18
R23
R22
R40
U1

6,000
2,000
0, 0
J1
U10
PC2
PC5
PC3
PC4
PC6
PC1
DC32
DC15
DC14
DC21
DC12
DC10
DC9
DC11
DC20
DC7
DC16
DC5
DC24
R49
R54
DC25
DC17
DC6
DC2
DC27
DC19
DC26
DC18
DC1
R13
R14
R30
R31
R55
R46
R7
R2
-850, -1580
-4500, -1370
-4040 150

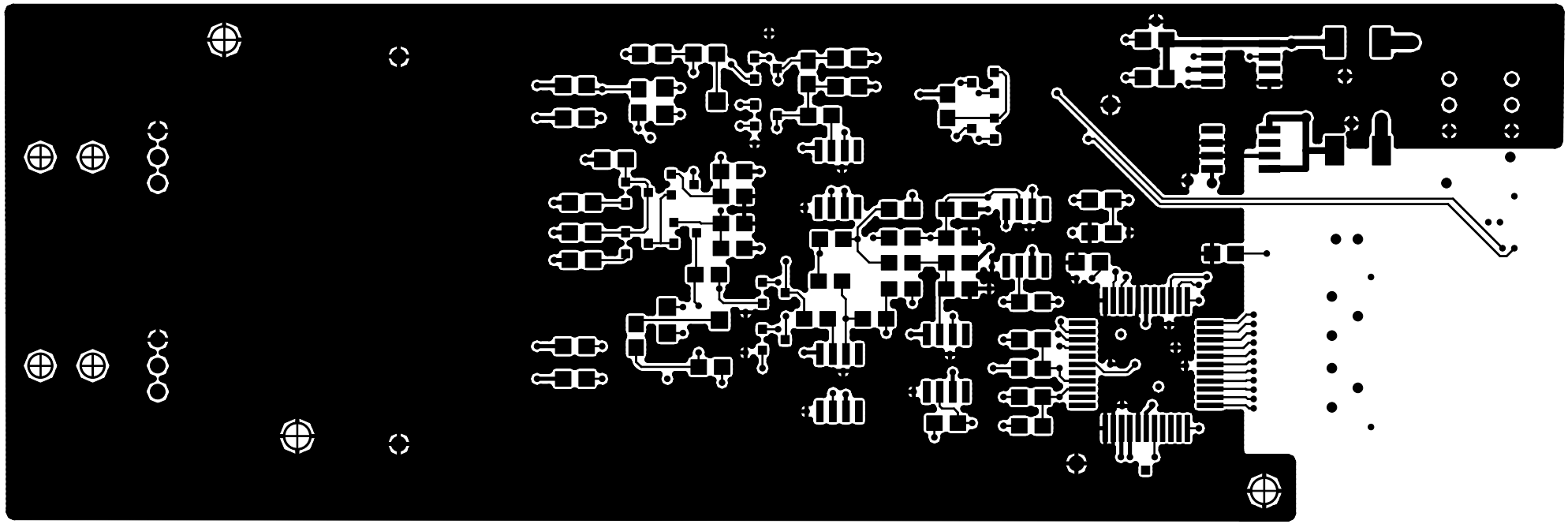

Top

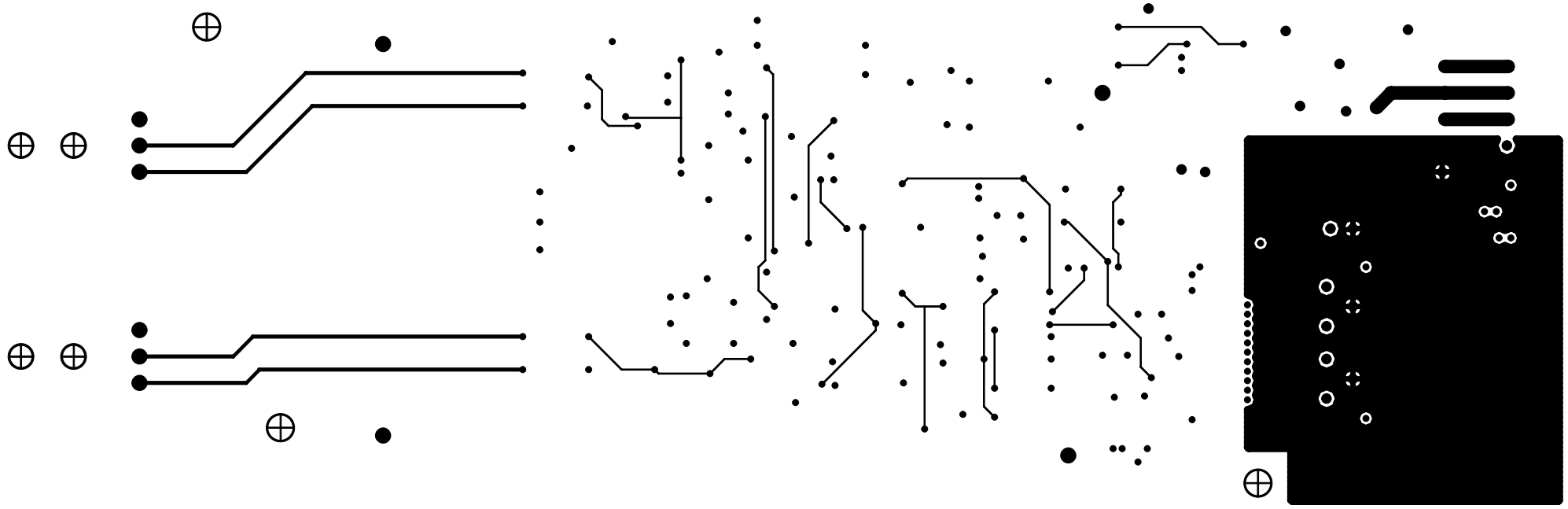

Layer 2

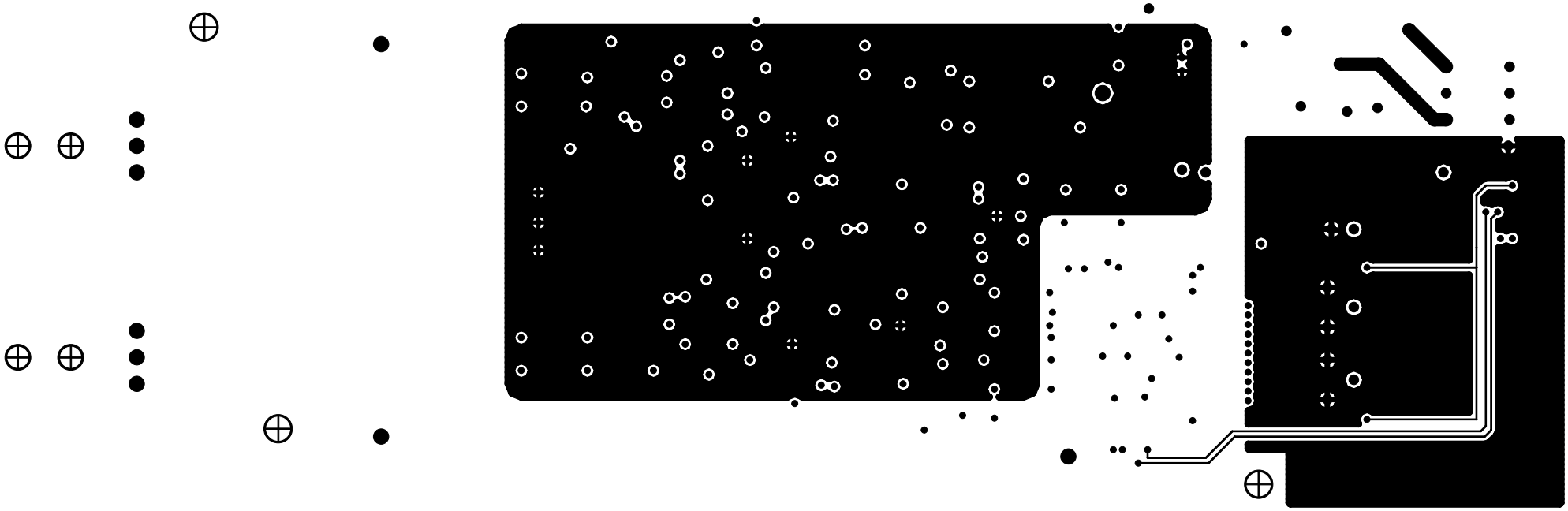

Layer 3

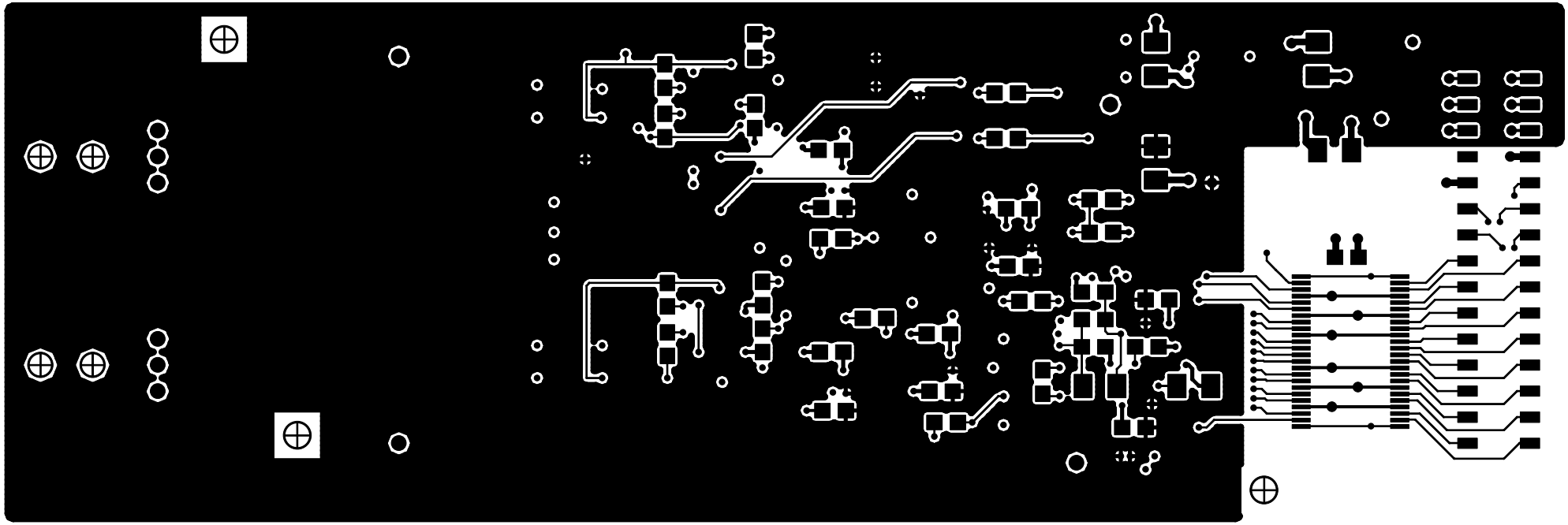

Bottom

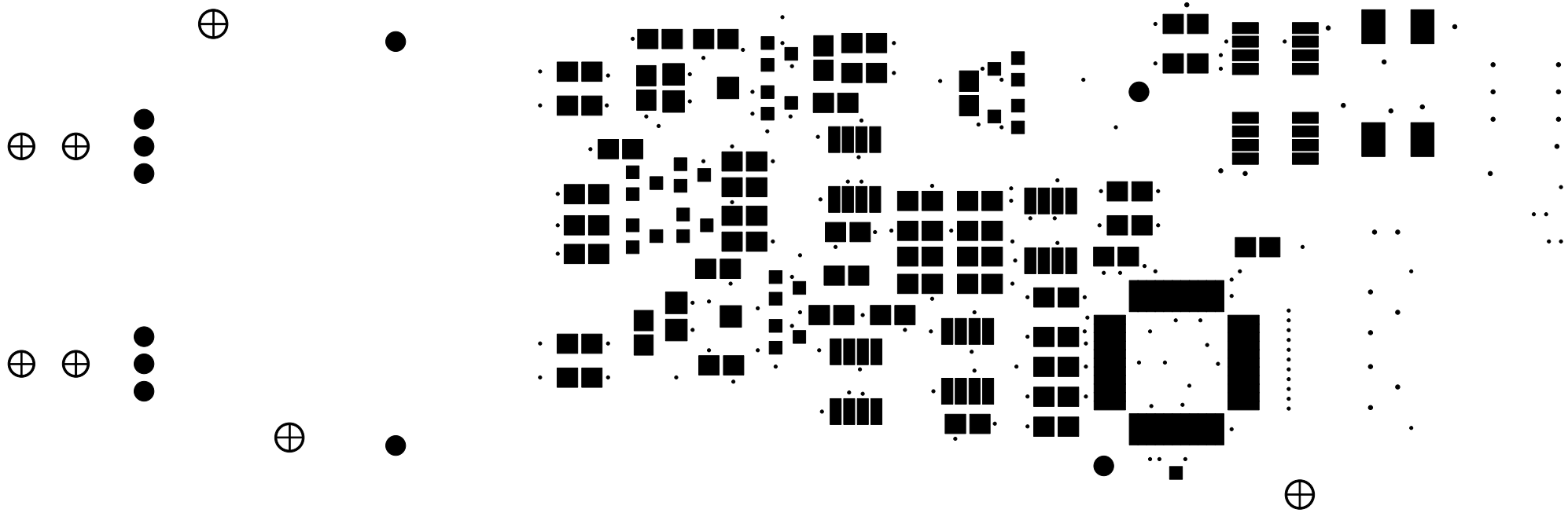

Top Mask

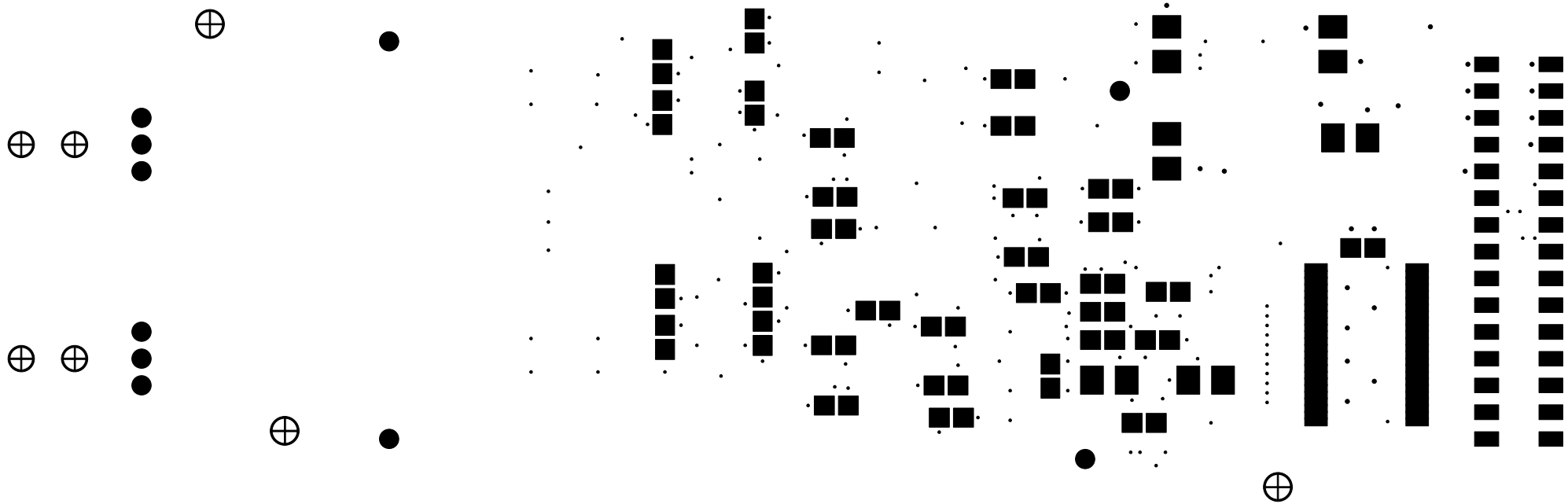

Bottom Mask

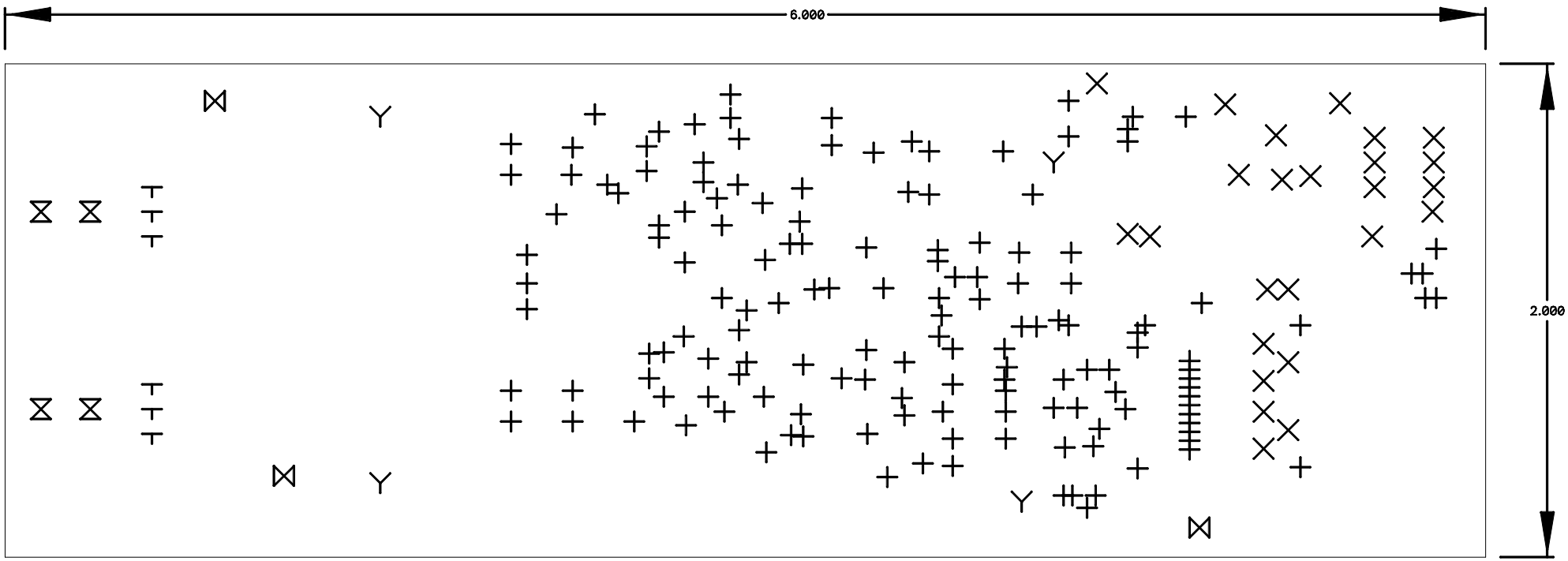

Drill and Board

Drill Symbol Table		
Hole Dia (inch)	Symbol	Quantity
0.013		152
0.018		25
0.038		4
0.041		6
0.100		4
0.110		3

	Last	**updated - 3/27/2001**			
Count	RefDes	ComponentName	Value	PatternName	Location
Ics					
1	U1	AD9240		QFP-44-.031	
1	U2	AD8051AR		SO8	
1	U3	AD8051AR		SO8	
1	U4	AD8051AR		SO8	
1	U5	AD8051AR		SO8	
1	U10	CY74FCT244T-O		SSOP-48-.025	Bottom layer
Caps					
1	DC1	CAP-805	5 pf	RC0805	All DC caps
1	DC2	CAP-805	5 pf	RC0805	on bottom
1	DC5	CAP-805	5 pf	RC0805	layer
1	DC6	CAP-805	5 pf	RC0805	
1	DC7	CAP-805	75pF	RC0805	
1	DC9	CAP-805	0.1uF	RC0805	
1	DC10	CAP-805	0.1uF	RC0805	
1	DC11	CAP-805	0.1uF	RC0805	
1	DC12	CAP-805	0.1uF	RC0805	
1	DC14	CAP-805	0.1uF	RC0805	
1	DC15	CAP-805	0.1uF	RC0805	
1	DC16	CAP-805	0.1uF	RC0805	
1	DC17	CAP-805	0.1uF	RC0805	
1	DC18	CAP-805	0.1uF	RC0805	
1	DC19	CAP-805	0.1uF	RC0805	
1	DC20	CAP-805	0.1uF	RC0805	
1	DC21	CAP-805	0.1uF	RC0805	
1	DC24	CAP-805	0.1uF	RC0805	
1	DC25	CAP-805	0.1uF	RC0805	
1	DC26	CAP-805	0.1uF	RC0805	
1	DC27	CAP-805	0.1uF	RC0805	
1	DC32	CAP-805	0.1uF	RC0805	
1	DC37	CAP-805	0.1uF	RC0805	Top layer
Fuses					
1	F1	SMT fuse	1/4 Amp		
1	F2	SMT fuse	1/4 Amp		
Polarized	Caps				
1	PC1	CAP-POLAR-B	4.7uF	CAP_CASEB_3528	All PC caps
1	PC2	CAP-POLAR-B	4.7uF	CAP_CASEB_3528	on bottom
1	PC3	CAP-POLAR-B	4.7uF	CAP_CASEB_3528	layer
1	PC4	CAP-POLAR-B	4.7uF	CAP_CASEB_3528	
1	PC5	CAP-POLAR-B	4.7uF	CAP_CASEB_3528	
1	PC6	CAP-POLAR-B	4.7uF	CAP_CASEB_3528	
Regulators					
1	REG1	LT1175		SO8	
1	REG2	MAX883		SO8	

Conns					
1	J1	MEZZ_CONNECTOR		CONN30_100	Bottom layer
1	J2	MEZZ_INPUT_REV1		GORE_CONN_45	
1	J3	MEZZ_INPUT_REV1		GORE_CONN_45	
Transistors					
1	Q1	BFS17H	NPN	SOT-23(BEC)	
1	Q2	BFS17H	NPN	SOT-23(BEC)	
1	Q3	CMPT3904	NPN	SOT-23(BEC)	
1	Q4	CMPT3904	NPN	SOT-23(BEC)	
1	Q5	BFS17H	NPN	SOT-23(BEC)	
1	Q6	BFS17H	NPN	SOT-23(BEC)	
1	Q7	CMPT3904	NPN	SOT-23(BEC)	
1	Q8	CMPT3904	NPN	SOT-23(BEC)	
1	Q9	MMBT3906	PNP	SOT-23(BEC)	
1	Q10	MMBT3906	PNP	SOT-23(BEC)	
Pots					
1	RP1	POT-SM	100 ohms	POT_SM	
1	RP2	POT-SM	100 ohms	POT_SM	
Resistors					
1	R1	RES-805	100	RC0805	
1	R2	RES-805	422	RC0805	Bottom layer
1	R3	RES-805	1.0K	RC0805	
1	R4	RES-805	1.00K	RC0805	
1	R5	RES-805	100	RC0805	
1	R6	RES-805	1.0K	RC0805	
1	R7	RES-805	270	RC0805	Bottom layer--replaced by 267
1	R8	RES-805	665	RC0805	
1	R9	RES-805	665	RC0805	
1	R10	RES-805	665	RC0805	
1	R11	RES-805	825	RC0805	
1	R12	RES-805	825	RC0805	
1	R13	RES-805	49.9	RC0805	Bottom layer
1	R14	RES-805	49.9	RC0805	Bottom layer
1	R15	RES-805	1.1K	RC0805	
1	R16	RES-805	1.1K	RC0805	
1	R17	RES-805	1.0K	RC0805	
1	R18	RES-805	100	RC0805	
1	R19	RES-805	2.0K	RC0805	
1	R20	RES-805	1.1K	RC0805	
1	R21	RES-805	1.1K	RC0805	
1	R22	RES-805	1.0K	RC0805	
1	R23	RES-805	100	RC0805	
1	R24	RES-805	2.0K	RC0805	
1	R25	RES-805	665	RC0805	
1	R26	RES-805	665	RC0805	
1	R27	RES-805	665	RC0805	
1	R28	RES-805	100	RC0805	
1	R29	RES-805	100	RC0805	

1	R30	RES-805	49.9	RC0805	Bottom layer
1	R31	RES-805	49.9	RC0805	Bottom layer
1	R32	RES-805	39.2	RC0805	
1	R33	RES-805	omit	RC0805	
1	R34	RES-805	1.0K	RC0805	
1	R35	RES-805	3.9K	RC0805	
1	R36	RES-805	2.0K	RC0805	
1	R37	RES-805	omit	RC0805	
1	R38	RES-805	omit	RC0805	
1	R39	RES-805	1.0K	RC0805	
1	R40	RES-805	omit	RC0805	
1	R41	RES-805	omit	RC0805	
1	R42	RES-805	39.2	RC0805	
1	R43	RES-805	39.2	RC0805	
1	R44	RES-805	39.2	RC0805	
1	R45	RES-805	2.0K	RC0805	
1	R46	RES-805	422	RC0805	Bottom layer
1	R47	RES-805	1.0K	RC0805	
1	R48	RES-805	4.3K	RC0805	
1	R49	RES-805	51	RC0805	Bottom layer
1	R50	RES-805	3.7K	RC0805	
1	R51	RES-805	1.3K	RC0805	
1	R52	RES-805	3.7K	RC0805	
1	R53	RES-805	1.3K	RC0805	
1	R54	RES-805	51	RC0805	Bottom layer
1	R55	RES-805	270	RC0805	Bottom layer--replaced by 267
1	R56	RES-805	omit	RC0805	

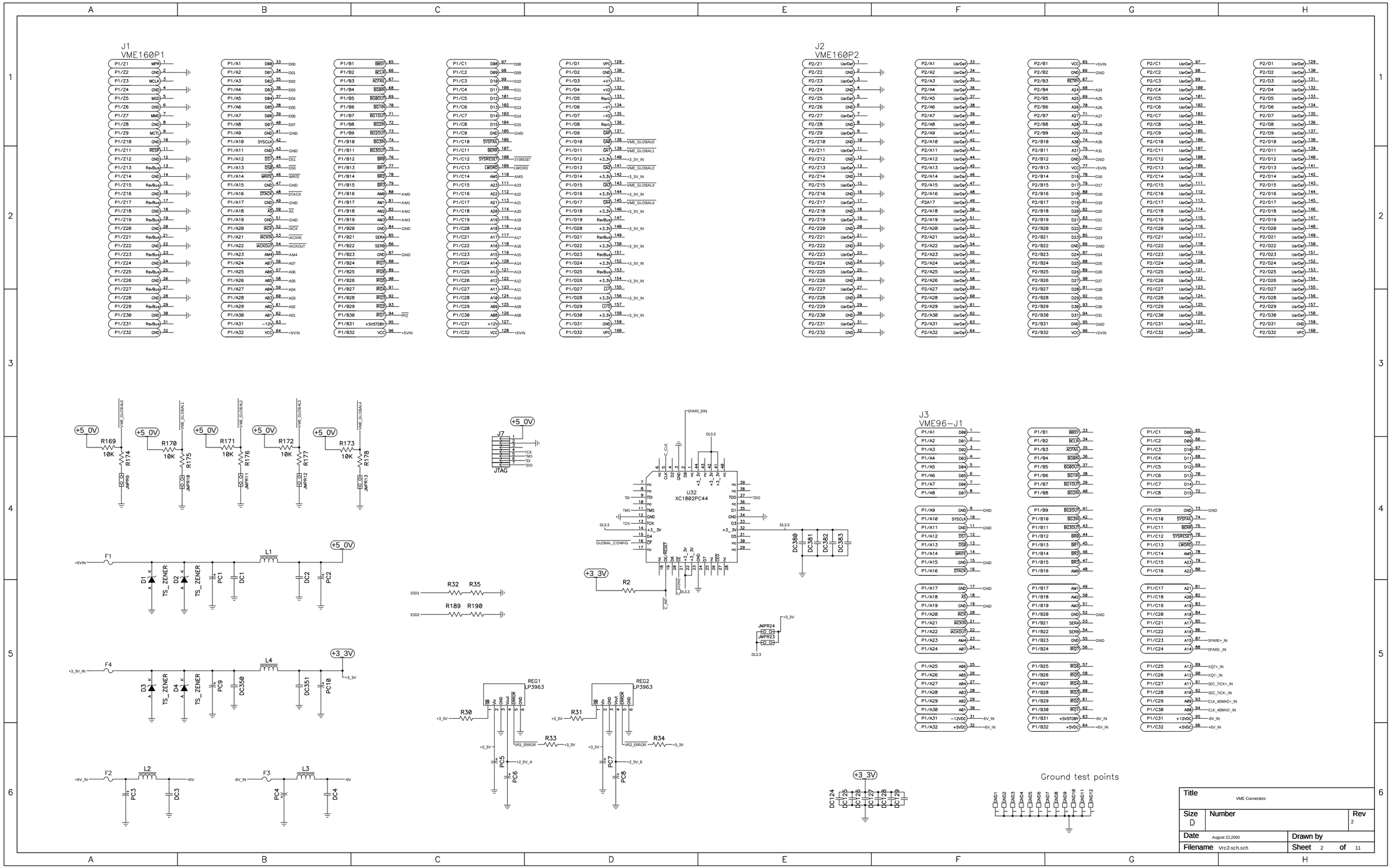
J1
VME160P1
J2
VME160P2
J3
VME96-J1
J7
JTAG
U32
XC1802PC44
REG1
LP3963
REG2
LP3963
Ground test points
Title
VME Connectors
Size
D
Number
Rev
2
Date
August 22,2000
Drawn by
Filename
Vrc2-sch.sch
Sheet
2
of
11

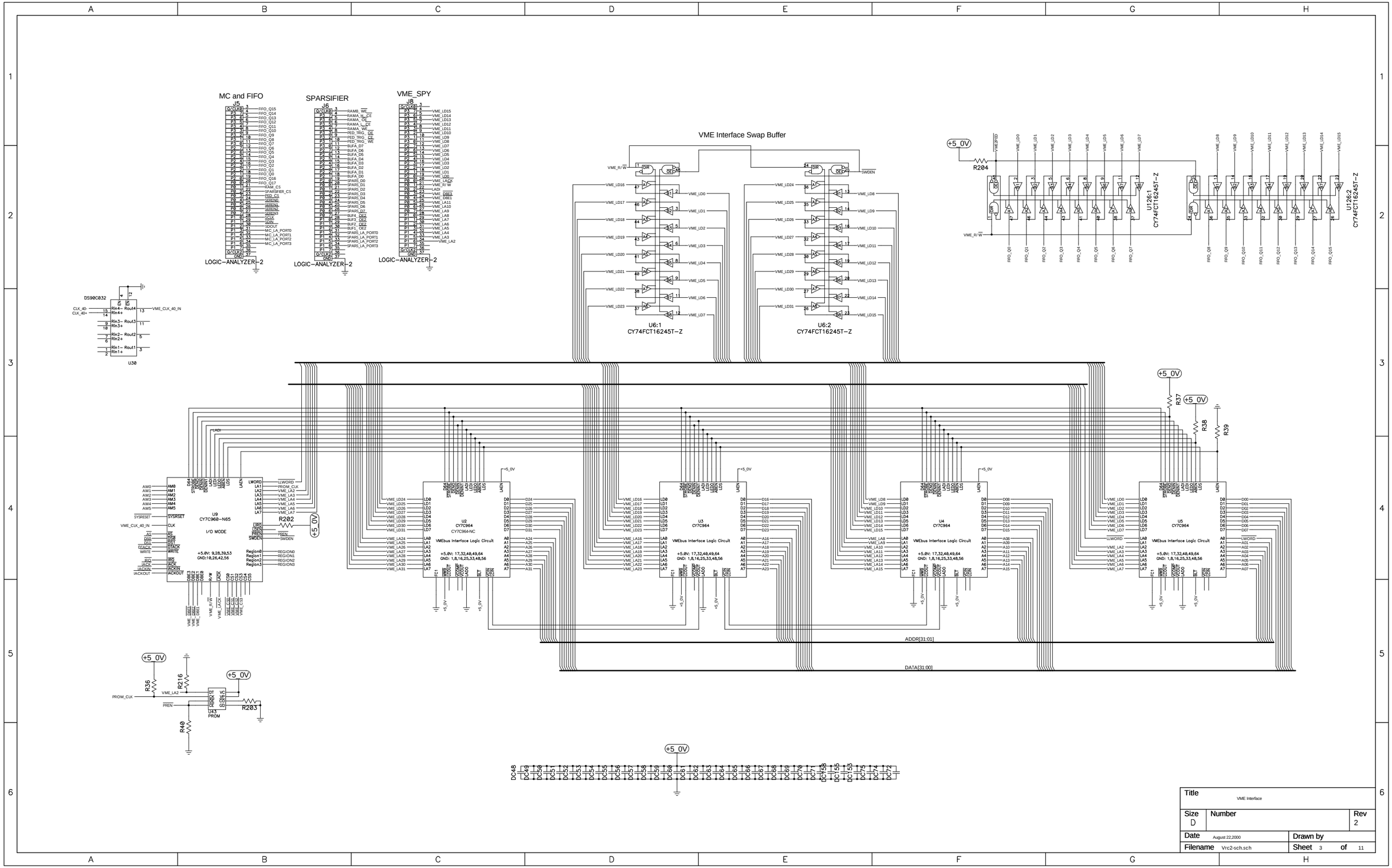
MC and FIFO
J5
LOGIC-ANALYZER-2
SPARSIFIER
J6
LOGIC-ANALYZER-2
VME_SPY
J8
LOGIC-ANALYZER-2
VME Interface Swap Buffer
U6:1
CY74FCT16245T-Z
U6:2
CY74FCT16245T-Z
U126:1
CY74FCT16245T-Z
U126:2
CY74FCT16245T-Z
DS90C032
U30
U9
CY7C968-N65
I/O MODE
U2
CY7C964
CY7C964-NC
U3
CY7C964
U4
CY7C964
U5
CY7C964
VMEbus Interface Logic Circuit
U47
PROM
ADDR[31:01]
DATA[31:00]
Title
VME Interface
Size
D
Number
Rev
2
Date
August 22,2000
Drawn by
Filename
Vrc2-sch.sch
Sheet
3
of
11

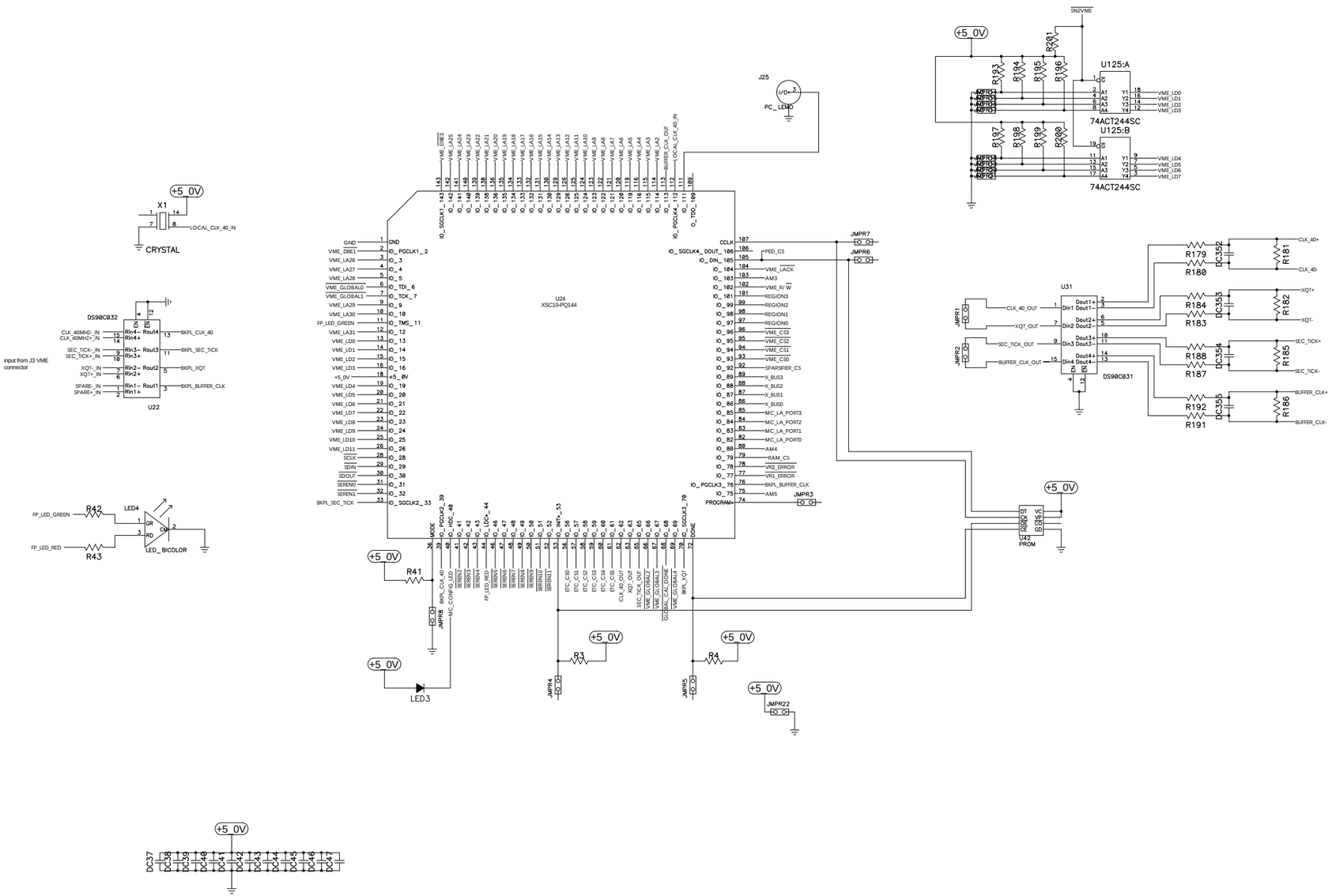

Title	Master Clock	
Size D	Number	Rev 2
Date August 22,2000	Drawn by (Drawn By)	
Filename Vrc2-sch.sch	Sheet 4 of 11	

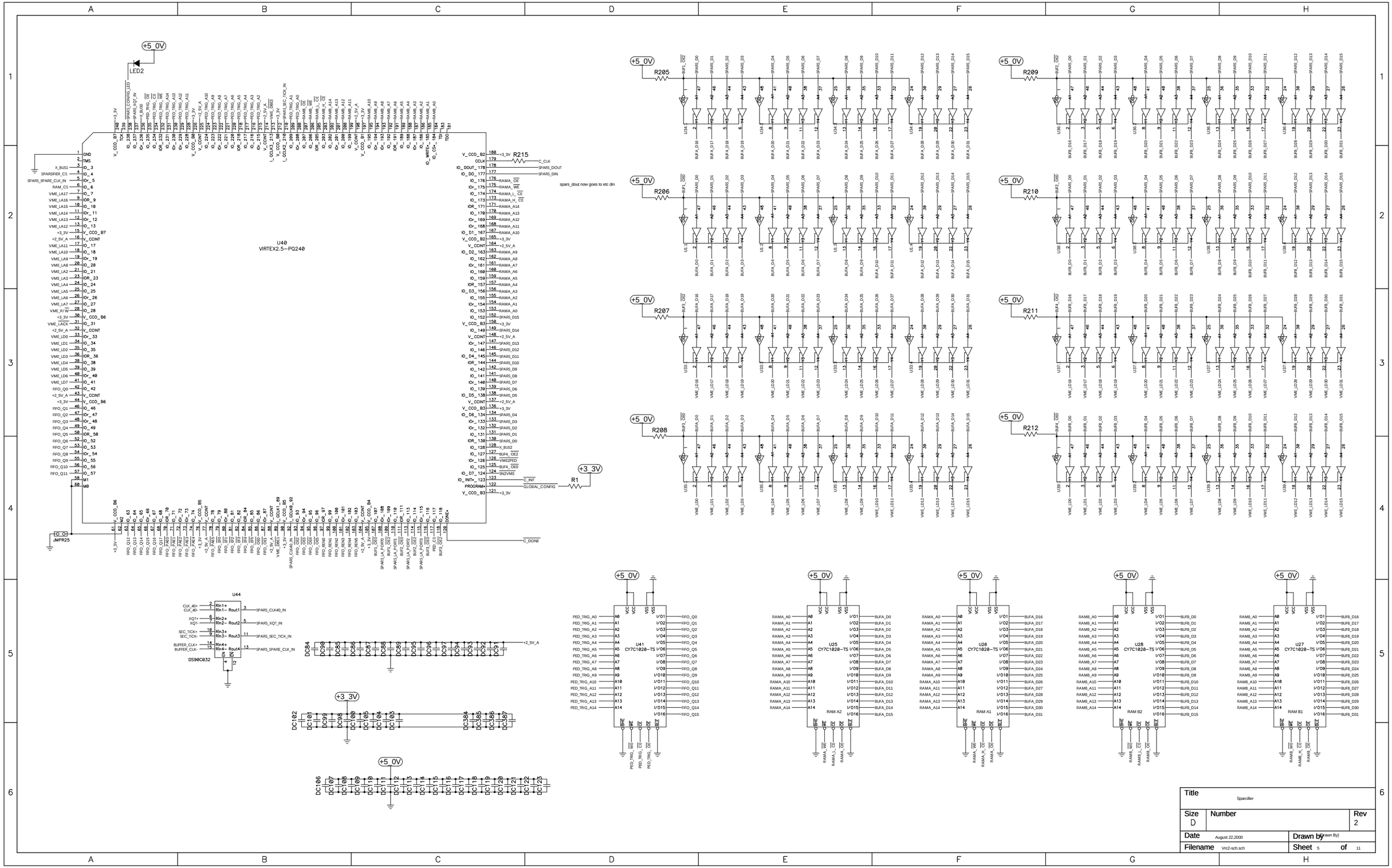
U40
VIRTEX2.5-PQ240
LED2
R1
R205
R206
R207
R208
R209
R210
R211
R212
U41
CY7C1020-TS
U25
CY7C1020-TS
U26
CY7C1020-TS
U28
CY7C1020-TS
U27
CY7C1020-TS
RAM A2
RAM A1
RAM B2
RAM B1
U44
DS90C032
JMPR25
spars_dout now goes to etc din
Title
Sparcifier
Size
D
Number
Rev
2
Date
August 22,2000
Drawn by
Filename
Vrc2-sch.sch
Sheet 5 of 11

M4

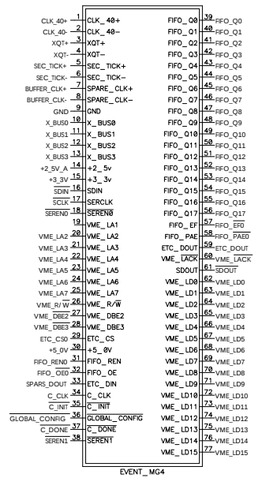

M6

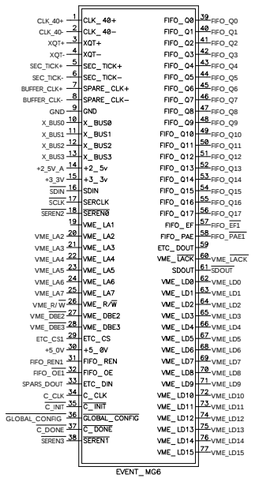

M5

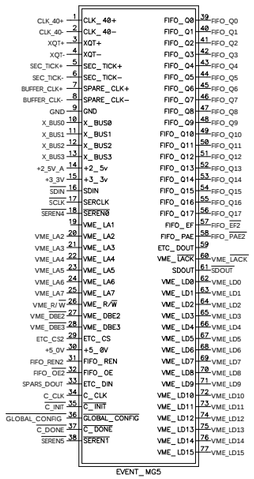

M2

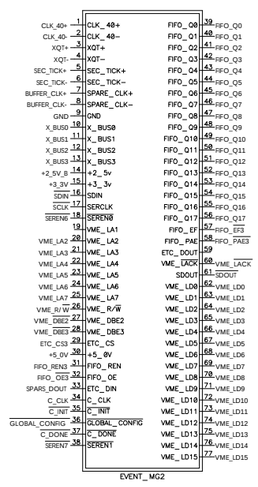

M1

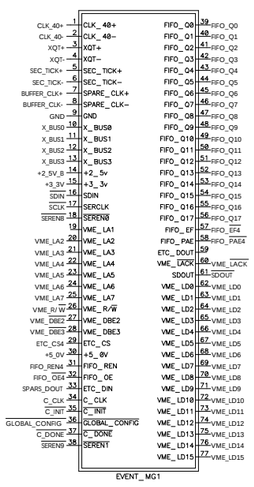

M3

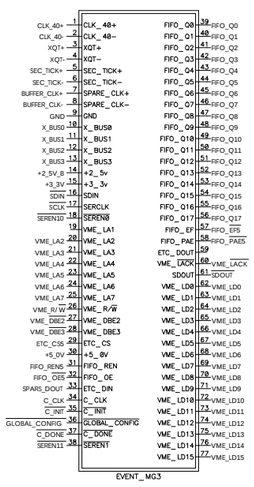

Title 1 of 6		
Size D	Number	Rev 2
Date August 22,2000	Drawn by {Drawn By}	
Filename Vrc2-sch.sch	Sheet 1 of 11	

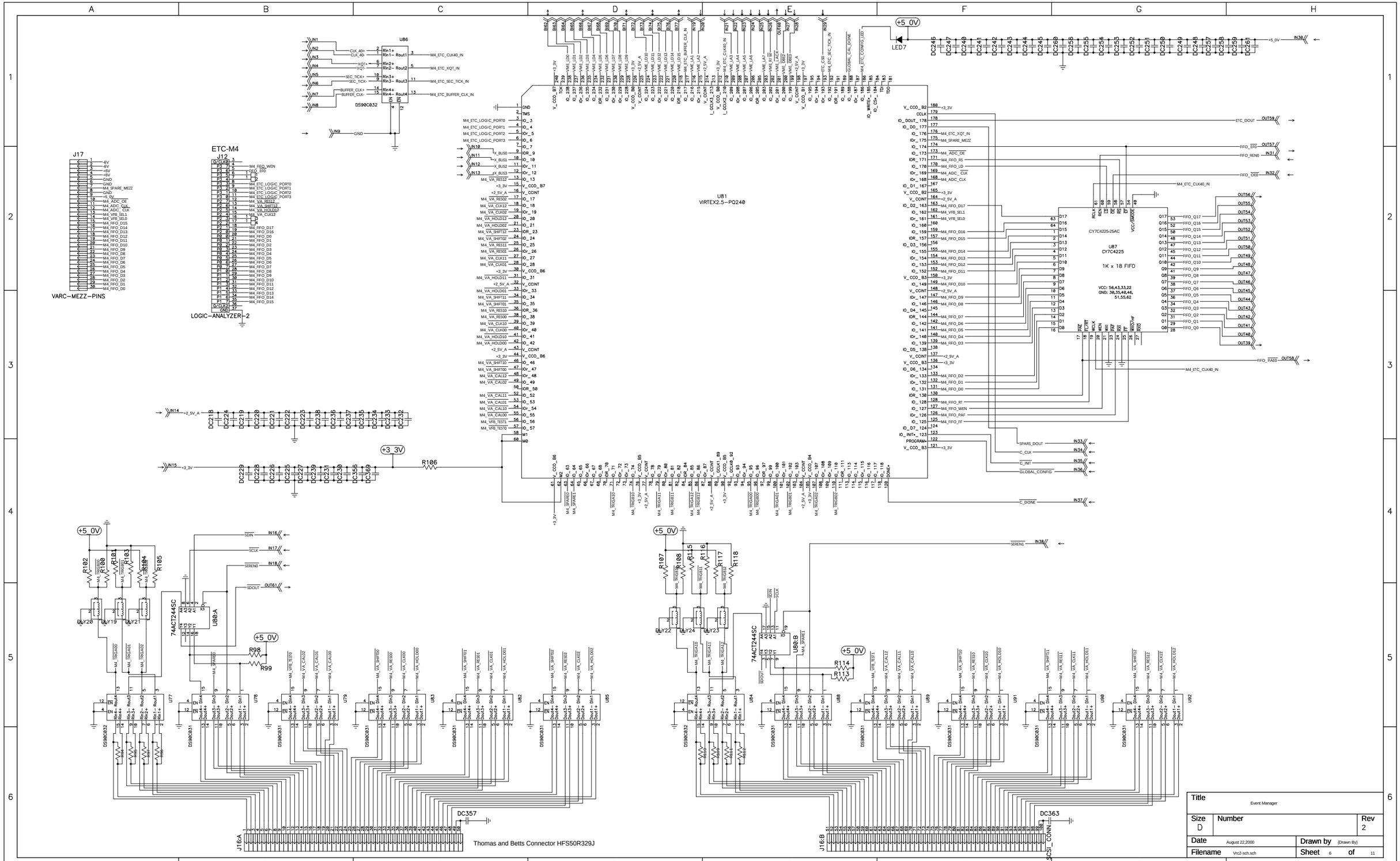

Title	Event Manager		
Size D	Number		Rev 2
Date	August 22,2000	Drawn by	(Drawn By)
Filename	Vrc2-sch.sch	Sheet 6	of 11

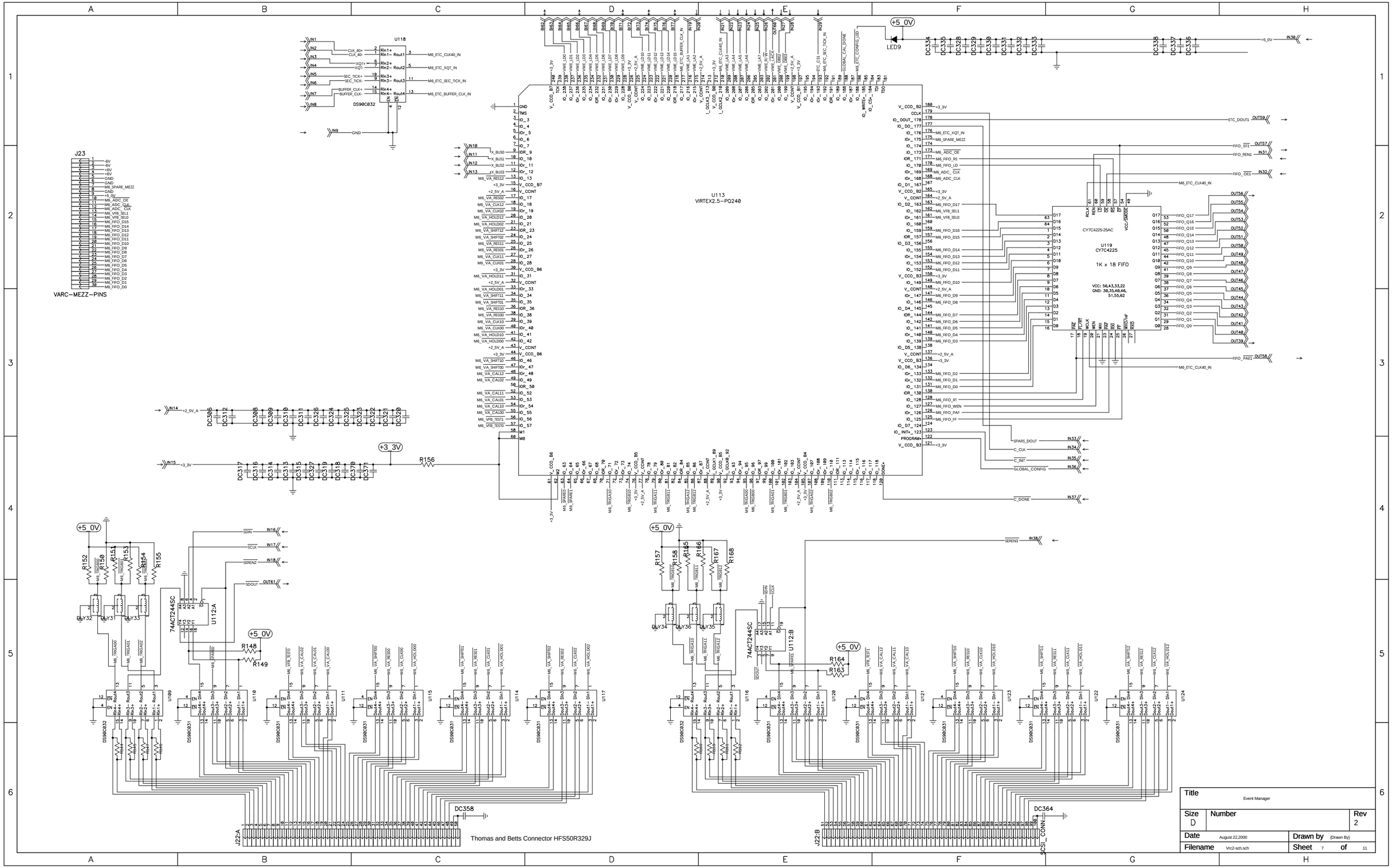
U118
DS90C032
J23
VARC-MEZZ-PINS
U113
VIRTEX2.5-PQ240
U119
CY7C4225
1K x 18 FIFO
CY7C4225-25AC
LED9
+5_0V
+3_3V
R156
74ACT244SC
U112:A
U112:B
DS90C031
J22:A
J22:B
Thomas and Betts Connector HFS50R329J
SCSI_CONN
Title
Event Manager
Size
D
Number
Rev
2
Date
August 22,2000
Drawn by
Filename
Vrc2-sch.sch
Sheet
7
of
11

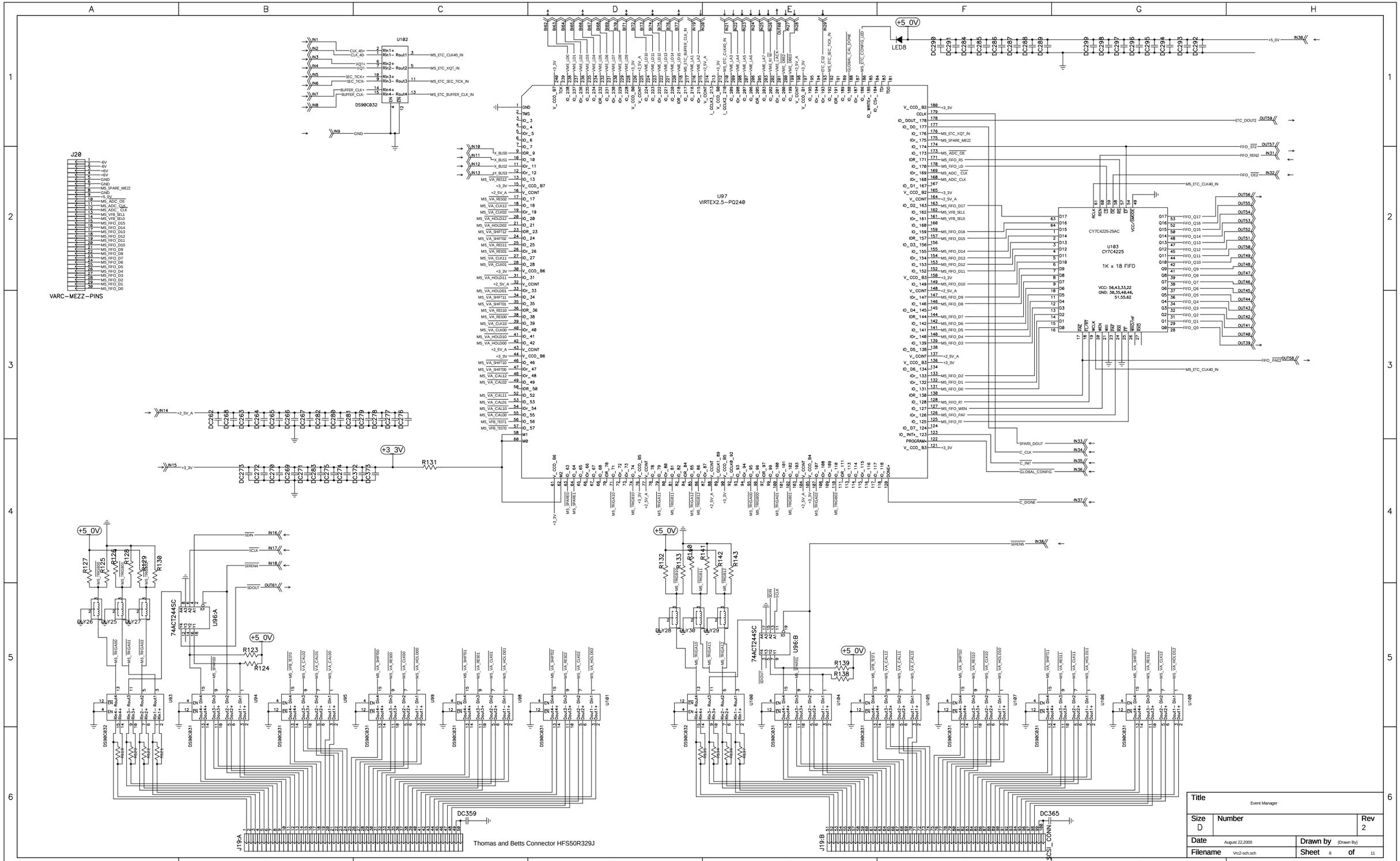

Title	Event Manager		
Size D	Number		Rev 2
Date	August 22,2000	Drawn by	(Drawn By)
Filename	Vrc2-sch.sch	Sheet 8	of 11

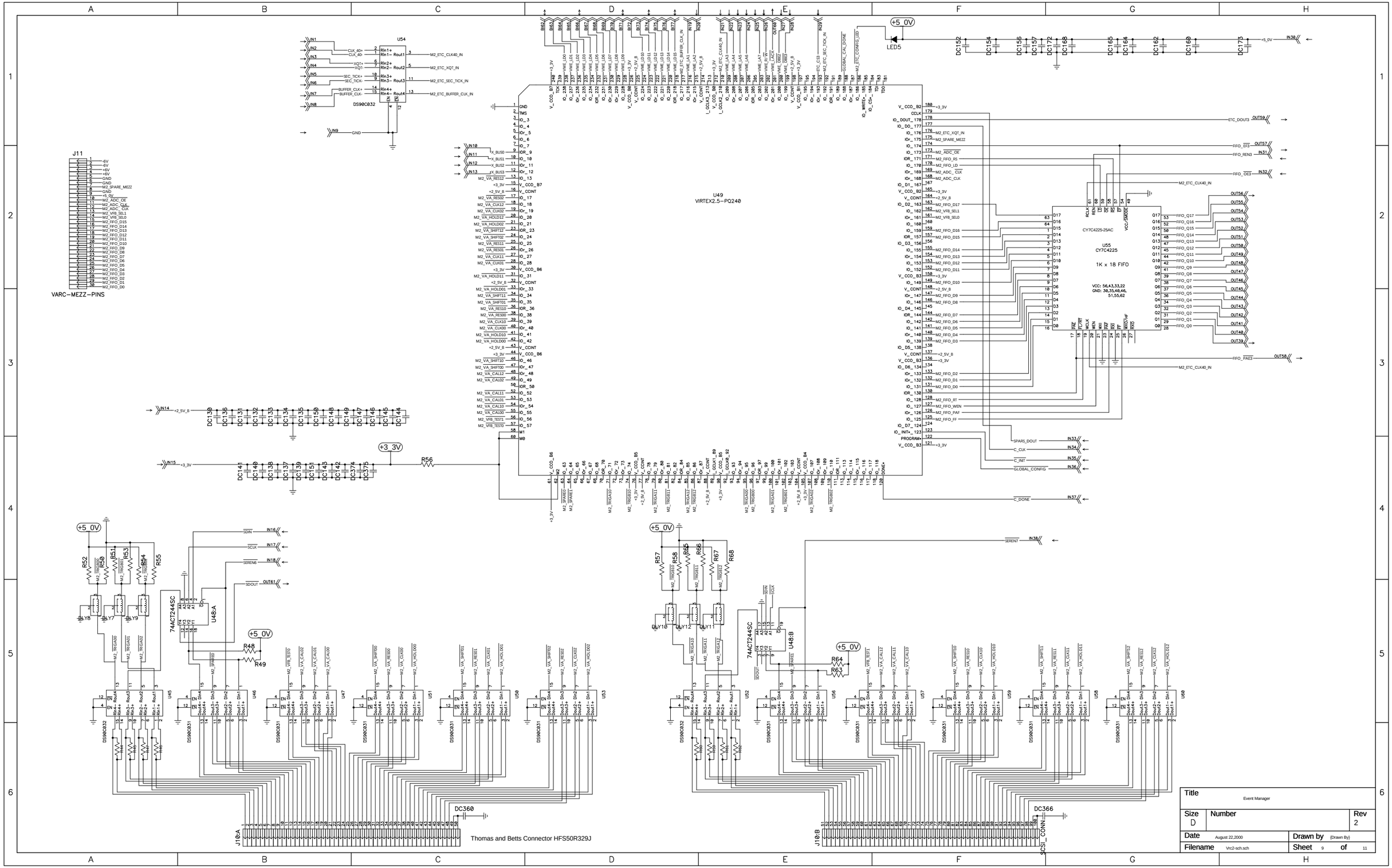

Title	Event Manager		
Size D	Number		Rev 2
Date	August 22,2000	Drawn by	(Drawn By)
Filename	Vrc2-sch.sch	Sheet 9	of 11

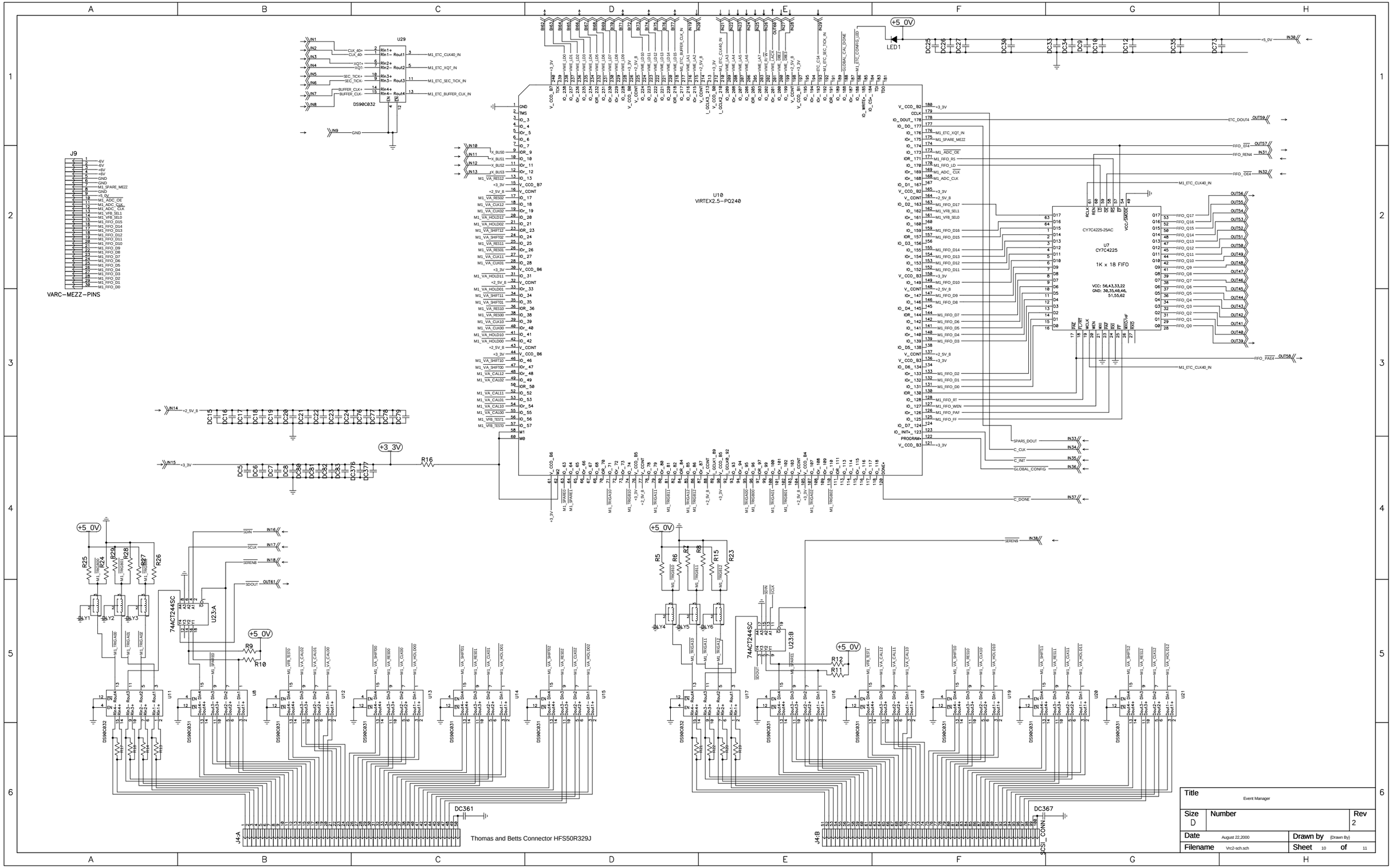

Title	Event Manager		
Size D	Number		Rev 2
Date	August 22,2000	Drawn by	(Drawn By)
Filename	Vrc2-sch.sch	Sheet 10	of 11

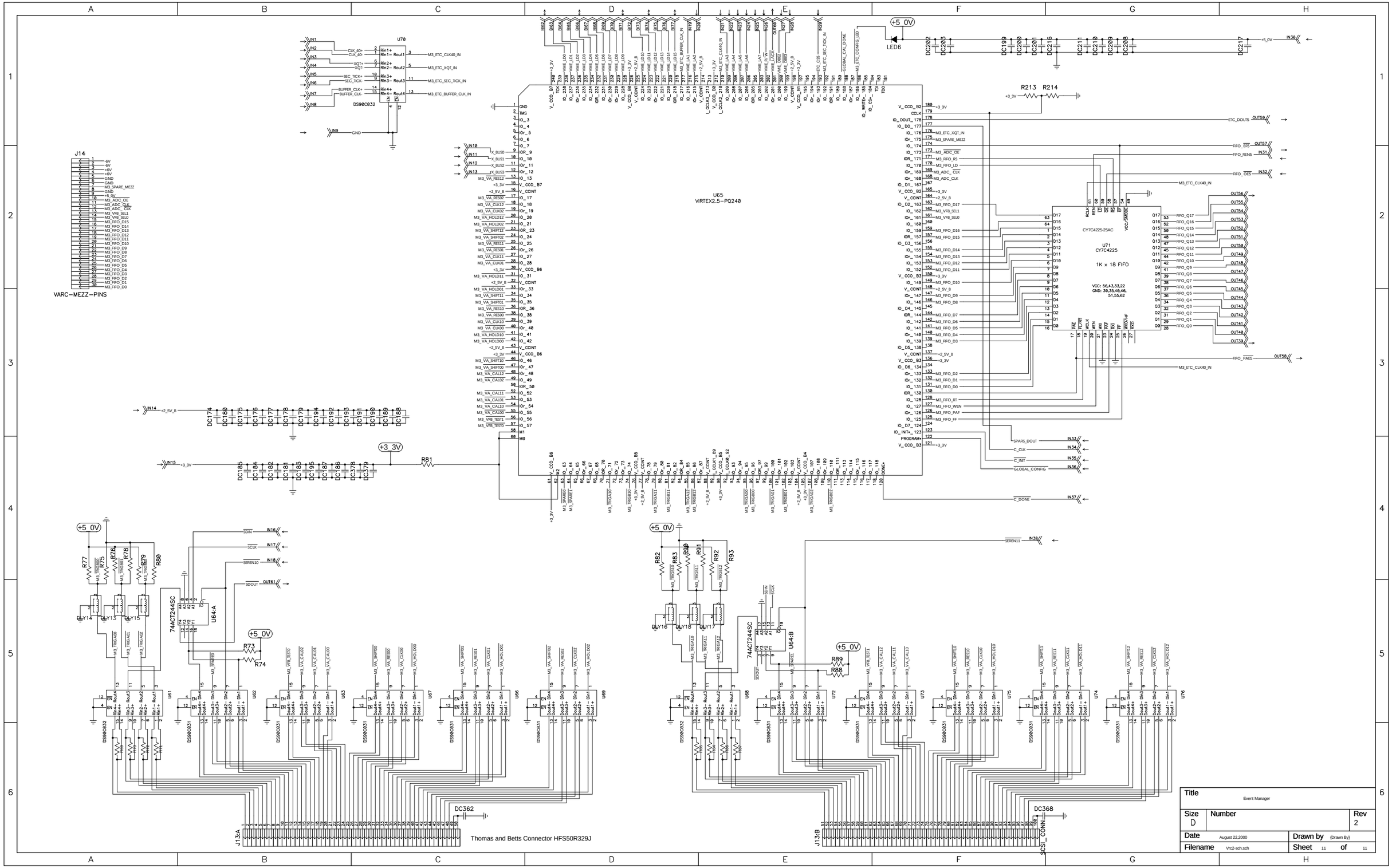

Title	Event Manager		
Size D	Number		Rev 2
Date	August 22,2000	Drawn by	(Drawn By)
Filename	Vrc2-sch.sch	Sheet 11	of 11

Harvard University
High Energy Physics Lab
MINOS VARC V2 Board No. [redacted]
August, 2000
NF/SH/JO/JO

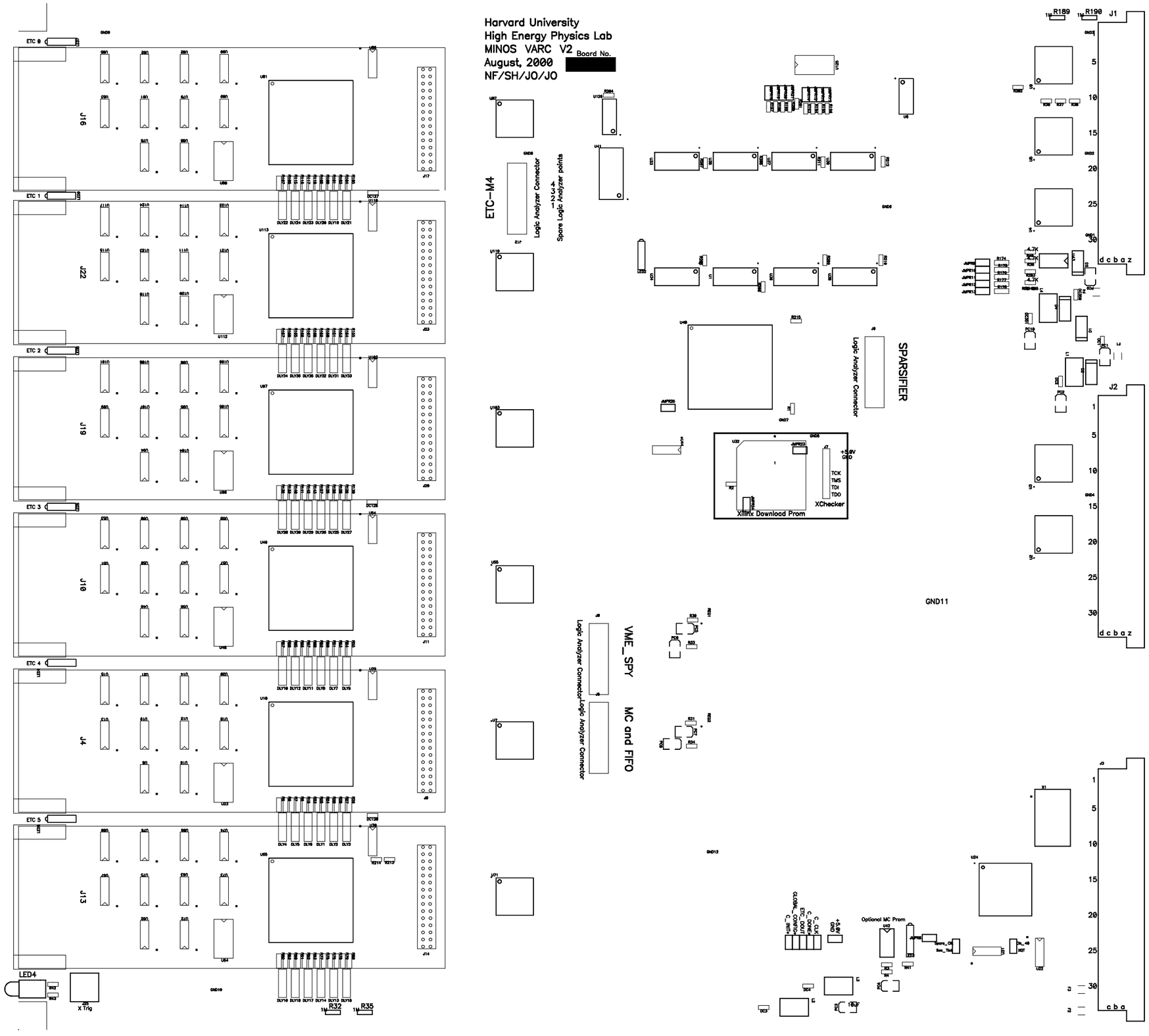

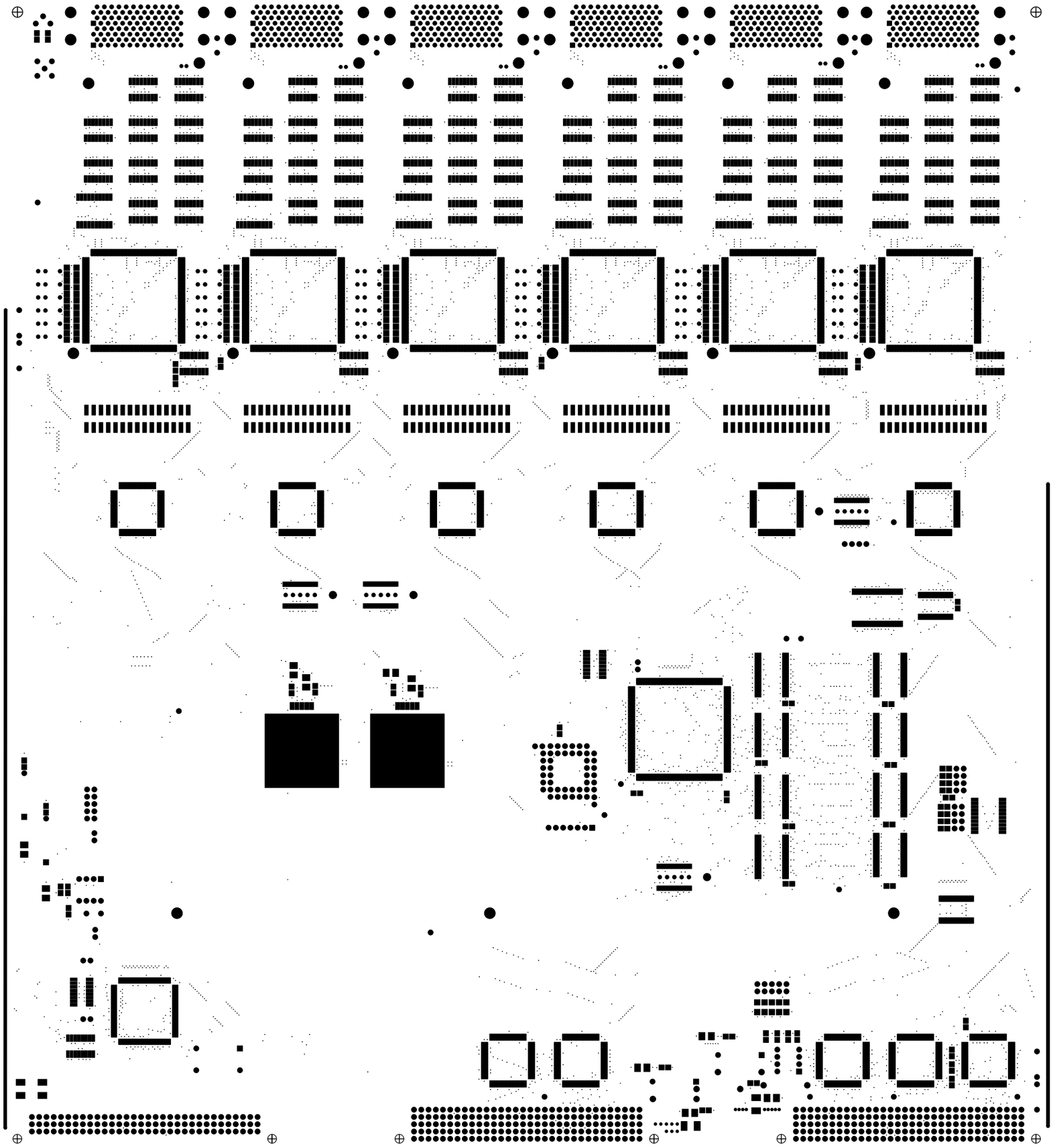

NATE
sarah

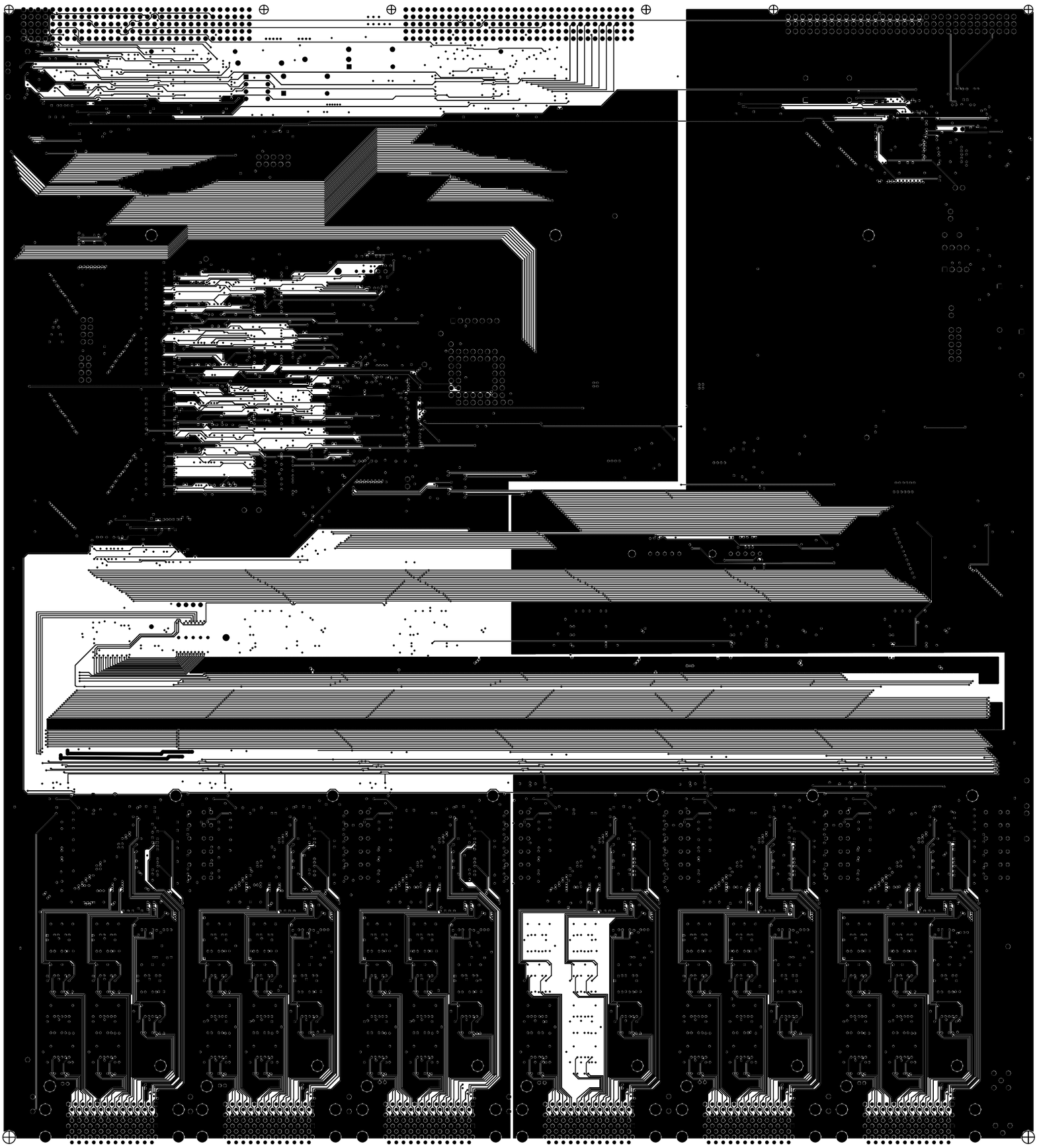

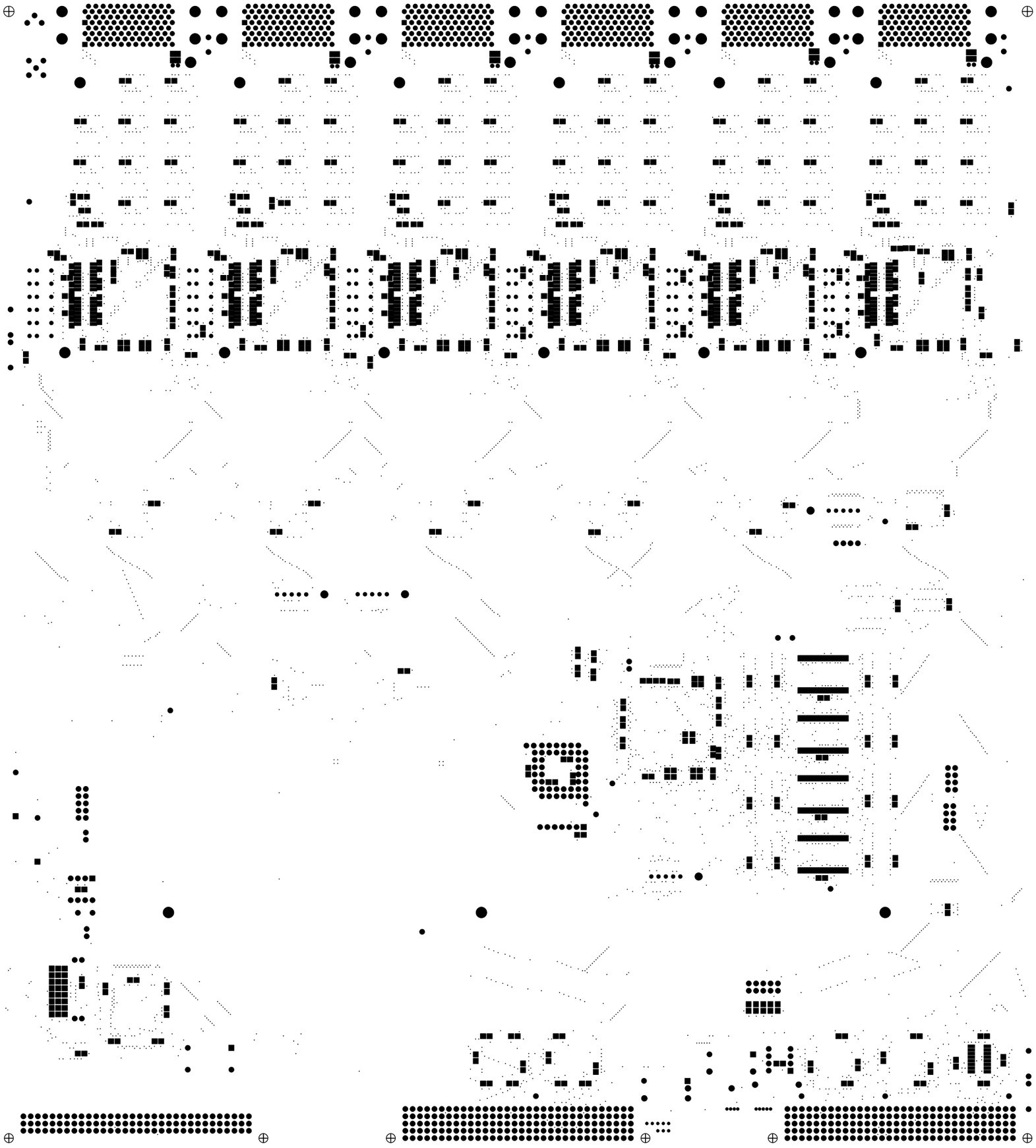

100 ohm
10K
7K

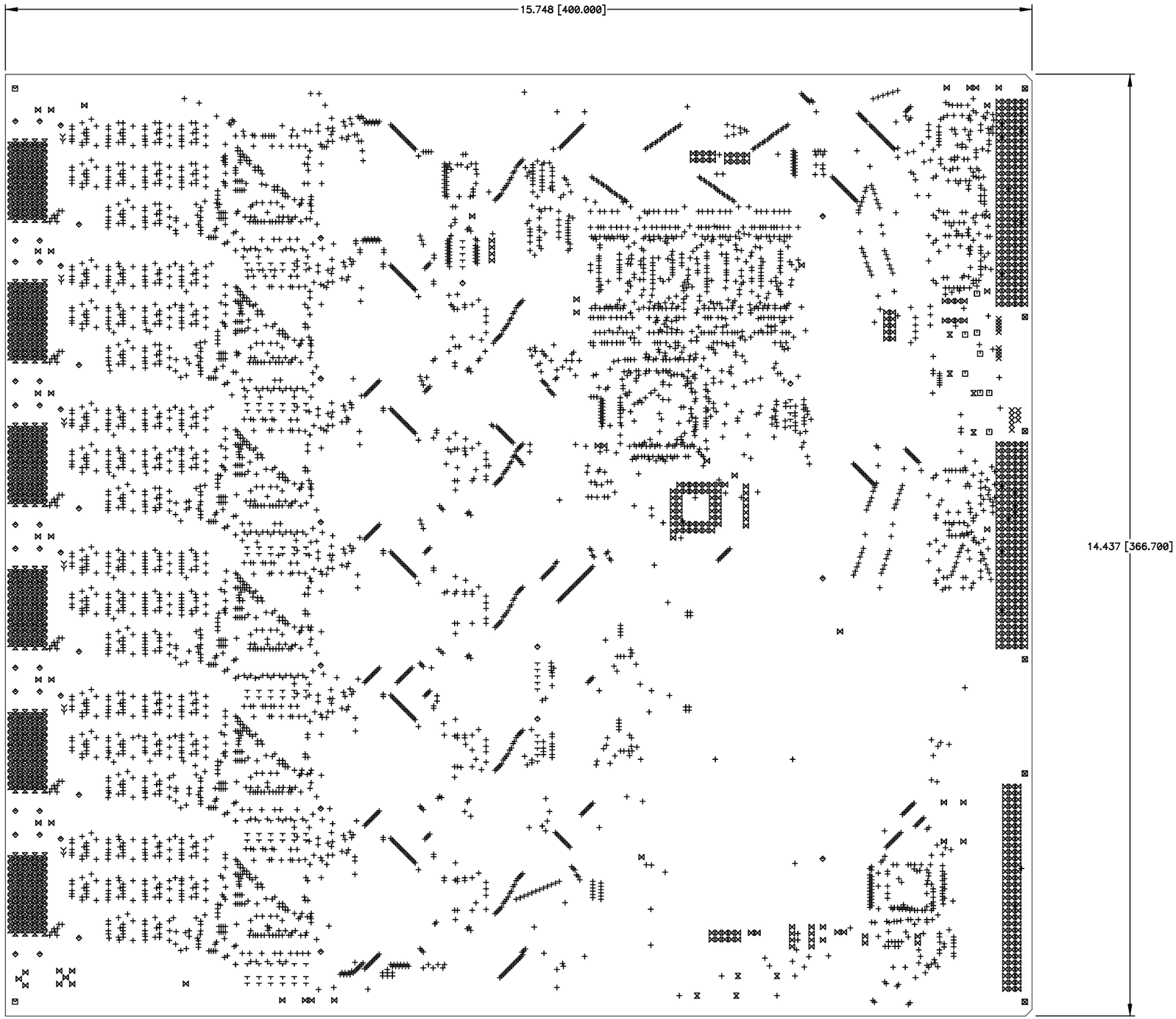

Drill Symbol Table		
Hole Dia (inch)	Symbol	Quantity
0.013		5020
0.017		17
0.018		12
0.032		128
0.034		608
0.038		585
0.050		8
0.094		4
0.100		2
0.109		45
0.110		6

Finished board thickness 0.093" +/- 0.006".
Mill solder side of board along top and bottom edges.
Mill width is 0.098" +0.000" -0.005 in from edges.
Finished board thickness of milled area 0.063" +/-0.005"

	Last updated 03/14/01			
RefDes	Type	Value	Part Number	Mfg/Vendor
D1		1N5908	1N5908	
D2		1N5908	1N5908	
D3		1N5908	1N5908	
D4		1N5908	1N5908	
DC1	CAP-805	0.1uF	0805B104K500NX	Garrett
DC2	CAP-805	0.1uF	0805B104K500NX	
DC3	CAP-805	0.1uF	0805B104K500NX	
DC4	CAP-805	0.1uF	0805B104K500NX	
DC5	CAP-805	0.1uF	0805B104K500NX	
DC6	CAP-805	0.1uF	0805B104K500NX	
DC7	CAP-805	0.1uF	0805B104K500NX	
DC8	CAP-805	0.1uF	0805B104K500NX	
DC9	CAP-805	0.1uF	0805B104K500NX	
DC10	CAP-805	0.1uF	0805B104K500NX	
DC12	CAP-805	0.1uF	0805B104K500NX	
DC15	CAP-805	0.1uF	0805B104K500NX	
DC16	CAP-805	0.1uF	0805B104K500NX	
DC17	CAP-805	0.1uF	0805B104K500NX	
DC18	CAP-805	0.1uF	0805B104K500NX	
DC19	CAP-805	0.1uF	0805B104K500NX	
DC20	CAP-805	0.1uF	0805B104K500NX	
DC21	CAP-805	0.1uF	0805B104K500NX	
DC22	CAP-805	0.1uF	0805B104K500NX	
DC23	CAP-805	0.1uF	0805B104K500NX	
DC24	CAP-805	0.1uF	0805B104K500NX	
DC25	CAP-805	0.1uF	0805B104K500NX	
DC26	CAP-805	0.1uF	0805B104K500NX	
DC27	CAP-805	0.1uF	0805B104K500NX	
DC30	CAP-805	0.1uF	0805B104K500NX	
DC33	CAP-805	0.1uF	0805B104K500NX	
DC34	CAP-805	0.1uF	0805B104K500NX	
DC35	CAP-805	0.1uF	0805B104K500NX	
DC37	CAP-805	0.1uF	0805B104K500NX	
DC38	CAP-805	0.1uF	0805B104K500NX	
DC39	CAP-805	0.1uF	0805B104K500NX	
DC40	CAP-805	0.1uF	0805B104K500NX	
DC41	CAP-805	0.1uF	0805B104K500NX	
DC42	CAP-805	0.1uF	0805B104K500NX	
DC43	CAP-805	0.1uF	0805B104K500NX	
DC44	CAP-805	0.1uF	0805B104K500NX	
DC45	CAP-805	0.1uF	0805B104K500NX	
DC46	CAP-805	0.1uF	0805B104K500NX	
DC47	CAP-805	0.1uF	0805B104K500NX	
DC48	CAP-805	0.1uF	0805B104K500NX	
DC49	CAP-805	0.1uF	0805B104K500NX	
DC50	CAP-805	0.1uF	0805B104K500NX	
DC51	CAP-805	0.1uF	0805B104K500NX	
DC52	CAP-805	0.1uF	0805B104K500NX	
DC53	CAP-805	0.1uF	0805B104K500NX	
DC54	CAP-805	0.1uF	0805B104K500NX	
DC55	CAP-805	0.1uF	0805B104K500NX	
DC56	CAP-805	0.1uF	0805B104K500NX	
DC57	CAP-805	0.1uF	0805B104K500NX	
DC58	CAP-805	0.1uF	0805B104K500NX	

DC59	CAP-805	0.1uF	0805B104K500NX	
DC60	CAP-805	0.1uF	0805B104K500NX	
DC61	CAP-805	0.1uF	0805B104K500NX	
DC62	CAP-805	0.1uF	0805B104K500NX	
DC63	CAP-805	0.1uF	0805B104K500NX	
DC64	CAP-805	0.1uF	0805B104K500NX	
DC65	CAP-805	0.1uF	0805B104K500NX	
DC66	CAP-805	0.1uF	0805B104K500NX	
DC67	CAP-805	0.1uF	0805B104K500NX	
DC68	CAP-805	0.1uF	0805B104K500NX	
DC69	CAP-805	0.1uF	0805B104K500NX	
DC70	CAP-805	0.1uF	0805B104K500NX	
DC71	CAP-805	0.1uF	0805B104K500NX	
DC72	CAP-805	0.1uF	0805B104K500NX	
DC73	CAP-805	0.1uF	0805B104K500NX	
DC74	CAP-805	0.1uF	0805B104K500NX	
DC75	CAP-805	0.1uF	0805B104K500NX	
DC76	CAP-805	0.1uF	0805B104K500NX	
DC77	CAP-805	0.1uF	0805B104K500NX	
DC78	CAP-805	0.1uF	0805B104K500NX	
DC79	CAP-805	0.1uF	0805B104K500NX	
DC80	CAP-805	0.1uF	0805B104K500NX	
DC81	CAP-805	0.1uF	0805B104K500NX	
DC82	CAP-805	0.1uF	0805B104K500NX	
DC83	CAP-805	0.1uF	0805B104K500NX	
DC84	CAP-805	0.1uF	0805B104K500NX	
DC85	CAP-805	0.1uF	0805B104K500NX	
DC86	CAP-805	0.1uF	0805B104K500NX	
DC87	CAP-805	0.1uF	0805B104K500NX	
DC88	CAP-805	0.1uF	0805B104K500NX	
DC89	CAP-805	0.1uF	0805B104K500NX	
DC90	CAP-805	0.1uF	0805B104K500NX	
DC91	CAP-805	0.1uF	0805B104K500NX	
DC92	CAP-805	0.1uF	0805B104K500NX	
DC93	CAP-805	0.1uF	0805B104K500NX	
DC94	CAP-805	0.1uF	0805B104K500NX	
DC95	CAP-805	0.1uF	0805B104K500NX	
DC96	CAP-805	0.1uF	0805B104K500NX	
DC97	CAP-805	0.1uF	0805B104K500NX	
DC98	CAP-805	0.1uF	0805B104K500NX	
DC99	CAP-805	0.1uF	0805B104K500NX	
DC100	CAP-805	0.1uF	0805B104K500NX	
DC101	CAP-805	0.1uF	0805B104K500NX	
DC102	CAP-805	0.1uF	0805B104K500NX	
DC103	CAP-805	0.1uF	0805B104K500NX	
DC104	CAP-805	0.1uF	0805B104K500NX	
DC105	CAP-805	0.1uF	0805B104K500NX	
DC106	CAP-805	0.1uF	0805B104K500NX	
DC107	CAP-805	0.1uF	0805B104K500NX	
DC108	CAP-805	0.1uF	0805B104K500NX	
DC109	CAP-805	0.1uF	0805B104K500NX	
DC110	CAP-805	0.1uF	0805B104K500NX	
DC111	CAP-805	0.1uF	0805B104K500NX	
DC112	CAP-805	0.1uF	0805B104K500NX	
DC113	CAP-805	0.1uF	0805B104K500NX	
DC114	CAP-805	0.1uF	0805B104K500NX	
DC115	CAP-805	0.1uF	0805B104K500NX	
DC116	CAP-805	0.1uF	0805B104K500NX	
DC117	CAP-805	0.1uF	0805B104K500NX	
DC118	CAP-805	0.1uF	0805B104K500NX	

DC119	CAP-805	0.1uF	0805B104K500NX	
DC120	CAP-805	0.1uF	0805B104K500NX	
DC121	CAP-805	0.1uF	0805B104K500NX	
DC122	CAP-805	0.1uF	0805B104K500NX	
DC123	CAP-805	0.1uF	0805B104K500NX	
DC124	CAP-805	0.1uF	0805B104K500NX	
DC125	CAP-805	0.1uF	0805B104K500NX	
DC126	CAP-805	0.1uF	0805B104K500NX	
DC127	CAP-805	0.1uF	0805B104K500NX	
DC128	CAP-805	0.1uF	0805B104K500NX	
DC129	CAP-805	0.1uF	0805B104K500NX	
DC130	CAP-805	0.1uF	0805B104K500NX	
DC131	CAP-805	0.1uF	0805B104K500NX	
DC132	CAP-805	0.1uF	0805B104K500NX	
DC133	CAP-805	0.1uF	0805B104K500NX	
DC134	CAP-805	0.1uF	0805B104K500NX	
DC135	CAP-805	0.1uF	0805B104K500NX	
DC136	CAP-805	0.1uF	0805B104K500NX	
DC137	CAP-805	0.1uF	0805B104K500NX	
DC138	CAP-805	0.1uF	0805B104K500NX	
DC139	CAP-805	0.1uF	0805B104K500NX	
DC140	CAP-805	0.1uF	0805B104K500NX	
DC141	CAP-805	0.1uF	0805B104K500NX	
DC142	CAP-805	0.1uF	0805B104K500NX	
DC143	CAP-805	0.1uF	0805B104K500NX	
DC144	CAP-805	0.1uF	0805B104K500NX	
DC145	CAP-805	0.1uF	0805B104K500NX	
DC146	CAP-805	0.1uF	0805B104K500NX	
DC147	CAP-805	0.1uF	0805B104K500NX	
DC148	CAP-805	0.1uF	0805B104K500NX	
DC149	CAP-805	0.1uF	0805B104K500NX	
DC150	CAP-805	0.1uF	0805B104K500NX	
DC151	CAP-805	0.1uF	0805B104K500NX	
DC152	CAP-805	0.1uF	0805B104K500NX	
DC153	CAP-805	0.1uF	0805B104K500NX	
DC154	CAP-805	0.1uF	0805B104K500NX	
DC155	CAP-805	0.1uF	0805B104K500NX	
DC156	CAP-805	0.1uF	0805B104K500NX	
DC157	CAP-805	0.1uF	0805B104K500NX	
DC158	CAP-805	0.1uF	0805B104K500NX	
DC160	CAP-805	0.1uF	0805B104K500NX	
DC162	CAP-805	0.1uF	0805B104K500NX	
DC164	CAP-805	0.1uF	0805B104K500NX	
DC165	CAP-805	0.1uF	0805B104K500NX	
DC168	CAP-805	0.1uF	0805B104K500NX	
DC172	CAP-805	0.1uF	0805B104K500NX	
DC173	CAP-805	0.1uF	0805B104K500NX	
DC174	CAP-805	0.1uF	0805B104K500NX	
DC175	CAP-805	0.1uF	0805B104K500NX	
DC176	CAP-805	0.1uF	0805B104K500NX	
DC177	CAP-805	0.1uF	0805B104K500NX	
DC178	CAP-805	0.1uF	0805B104K500NX	
DC179	CAP-805	0.1uF	0805B104K500NX	
DC180	CAP-805	0.1uF	0805B104K500NX	
DC181	CAP-805	0.1uF	0805B104K500NX	
DC182	CAP-805	0.1uF	0805B104K500NX	
DC183	CAP-805	0.1uF	0805B104K500NX	
DC184	CAP-805	0.1uF	0805B104K500NX	
DC185	CAP-805	0.1uF	0805B104K500NX	
DC186	CAP-805	0.1uF	0805B104K500NX	

DC187	CAP-805	0.1uF	0805B104K500NX	
DC188	CAP-805	0.1uF	0805B104K500NX	
DC189	CAP-805	0.1uF	0805B104K500NX	
DC190	CAP-805	0.1uF	0805B104K500NX	
DC191	CAP-805	0.1uF	0805B104K500NX	
DC192	CAP-805	0.1uF	0805B104K500NX	
DC193	CAP-805	0.1uF	0805B104K500NX	
DC194	CAP-805	0.1uF	0805B104K500NX	
DC195	CAP-805	0.1uF	0805B104K500NX	
DC199	CAP-805	0.1uF	0805B104K500NX	
DC200	CAP-805	0.1uF	0805B104K500NX	
DC201	CAP-805	0.1uF	0805B104K500NX	
DC202	CAP-805	0.1uF	0805B104K500NX	
DC203	CAP-805	0.1uF	0805B104K500NX	
DC208	CAP-805	0.1uF	0805B104K500NX	
DC209	CAP-805	0.1uF	0805B104K500NX	
DC210	CAP-805	0.1uF	0805B104K500NX	
DC211	CAP-805	0.1uF	0805B104K500NX	
DC216	CAP-805	0.1uF	0805B104K500NX	
DC217	CAP-805	0.1uF	0805B104K500NX	
DC218	CAP-805	0.1uF	0805B104K500NX	
DC219	CAP-805	0.1uF	0805B104K500NX	
DC220	CAP-805	0.1uF	0805B104K500NX	
DC221	CAP-805	0.1uF	0805B104K500NX	
DC222	CAP-805	0.1uF	0805B104K500NX	
DC223	CAP-805	0.1uF	0805B104K500NX	
DC224	CAP-805	0.1uF	0805B104K500NX	
DC225	CAP-805	0.1uF	0805B104K500NX	
DC226	CAP-805	0.1uF	0805B104K500NX	
DC227	CAP-805	0.1uF	0805B104K500NX	
DC228	CAP-805	0.1uF	0805B104K500NX	
DC229	CAP-805	0.1uF	0805B104K500NX	
DC230	CAP-805	0.1uF	0805B104K500NX	
DC231	CAP-805	0.1uF	0805B104K500NX	
DC232	CAP-805	0.1uF	0805B104K500NX	
DC233	CAP-805	0.1uF	0805B104K500NX	
DC234	CAP-805	0.1uF	0805B104K500NX	
DC235	CAP-805	0.1uF	0805B104K500NX	
DC236	CAP-805	0.1uF	0805B104K500NX	
DC237	CAP-805	0.1uF	0805B104K500NX	
DC238	CAP-805	0.1uF	0805B104K500NX	
DC239	CAP-805	0.1uF	0805B104K500NX	
DC240	CAP-805	0.1uF	0805B104K500NX	
DC241	CAP-805	0.1uF	0805B104K500NX	
DC242	CAP-805	0.1uF	0805B104K500NX	
DC243	CAP-805	0.1uF	0805B104K500NX	
DC244	CAP-805	0.1uF	0805B104K500NX	
DC245	CAP-805	0.1uF	0805B104K500NX	
DC246	CAP-805	0.1uF	0805B104K500NX	
DC247	CAP-805	0.1uF	0805B104K500NX	
DC248	CAP-805	0.1uF	0805B104K500NX	
DC249	CAP-805	0.1uF	0805B104K500NX	
DC250	CAP-805	0.1uF	0805B104K500NX	
DC251	CAP-805	0.1uF	0805B104K500NX	
DC252	CAP-805	0.1uF	0805B104K500NX	
DC253	CAP-805	0.1uF	0805B104K500NX	
DC254	CAP-805	0.1uF	0805B104K500NX	
DC255	CAP-805	0.1uF	0805B104K500NX	
DC256	CAP-805	0.1uF	0805B104K500NX	
DC257	CAP-805	0.1uF	0805B104K500NX	

DC258	CAP-805	0.1uF	0805B104K500NX	
DC259	CAP-805	0.1uF	0805B104K500NX	
DC260	CAP-805	0.1uF	0805B104K500NX	
DC261	CAP-805	0.1uF	0805B104K500NX	
DC262	CAP-805	0.1uF	0805B104K500NX	
DC263	CAP-805	0.1uF	0805B104K500NX	
DC264	CAP-805	0.1uF	0805B104K500NX	
DC265	CAP-805	0.1uF	0805B104K500NX	
DC266	CAP-805	0.1uF	0805B104K500NX	
DC267	CAP-805	0.1uF	0805B104K500NX	
DC268	CAP-805	0.1uF	0805B104K500NX	
DC269	CAP-805	0.1uF	0805B104K500NX	
DC270	CAP-805	0.1uF	0805B104K500NX	
DC271	CAP-805	0.1uF	0805B104K500NX	
DC272	CAP-805	0.1uF	0805B104K500NX	
DC273	CAP-805	0.1uF	0805B104K500NX	
DC274	CAP-805	0.1uF	0805B104K500NX	
DC275	CAP-805	0.1uF	0805B104K500NX	
DC276	CAP-805	0.1uF	0805B104K500NX	
DC277	CAP-805	0.1uF	0805B104K500NX	
DC278	CAP-805	0.1uF	0805B104K500NX	
DC279	CAP-805	0.1uF	0805B104K500NX	
DC280	CAP-805	0.1uF	0805B104K500NX	
DC281	CAP-805	0.1uF	0805B104K500NX	
DC282	CAP-805	0.1uF	0805B104K500NX	
DC283	CAP-805	0.1uF	0805B104K500NX	
DC284	CAP-805	0.1uF	0805B104K500NX	
DC285	CAP-805	0.1uF	0805B104K500NX	
DC286	CAP-805	0.1uF	0805B104K500NX	
DC287	CAP-805	0.1uF	0805B104K500NX	
DC288	CAP-805	0.1uF	0805B104K500NX	
DC289	CAP-805	0.1uF	0805B104K500NX	
DC290	CAP-805	0.1uF	0805B104K500NX	
DC291	CAP-805	0.1uF	0805B104K500NX	
DC292	CAP-805	0.1uF	0805B104K500NX	
DC293	CAP-805	0.1uF	0805B104K500NX	
DC294	CAP-805	0.1uF	0805B104K500NX	
DC295	CAP-805	0.1uF	0805B104K500NX	
DC296	CAP-805	0.1uF	0805B104K500NX	
DC297	CAP-805	0.1uF	0805B104K500NX	
DC298	CAP-805	0.1uF	0805B104K500NX	
DC299	CAP-805	0.1uF	0805B104K500NX	
DC306	CAP-805	0.1uF	0805B104K500NX	
DC307	CAP-805	0.1uF	0805B104K500NX	
DC308	CAP-805	0.1uF	0805B104K500NX	
DC309	CAP-805	0.1uF	0805B104K500NX	
DC310	CAP-805	0.1uF	0805B104K500NX	
DC311	CAP-805	0.1uF	0805B104K500NX	
DC312	CAP-805	0.1uF	0805B104K500NX	
DC313	CAP-805	0.1uF	0805B104K500NX	
DC314	CAP-805	0.1uF	0805B104K500NX	
DC315	CAP-805	0.1uF	0805B104K500NX	
DC316	CAP-805	0.1uF	0805B104K500NX	
DC317	CAP-805	0.1uF	0805B104K500NX	
DC318	CAP-805	0.1uF	0805B104K500NX	
DC319	CAP-805	0.1uF	0805B104K500NX	
DC320	CAP-805	0.1uF	0805B104K500NX	
DC321	CAP-805	0.1uF	0805B104K500NX	
DC322	CAP-805	0.1uF	0805B104K500NX	
DC323	CAP-805	0.1uF	0805B104K500NX	

DC324	CAP-805	0.1uF	0805B104K500NX	
DC325	CAP-805	0.1uF	0805B104K500NX	
DC326	CAP-805	0.1uF	0805B104K500NX	
DC327	CAP-805	0.1uF	0805B104K500NX	
DC328	CAP-805	0.1uF	0805B104K500NX	
DC329	CAP-805	0.1uF	0805B104K500NX	
DC330	CAP-805	0.1uF	0805B104K500NX	
DC331	CAP-805	0.1uF	0805B104K500NX	
DC332	CAP-805	0.1uF	0805B104K500NX	
DC333	CAP-805	0.1uF	0805B104K500NX	
DC334	CAP-805	0.1uF	0805B104K500NX	
DC335	CAP-805	0.1uF	0805B104K500NX	
DC336	CAP-805	0.1uF	0805B104K500NX	
DC337	CAP-805	0.1uF	0805B104K500NX	
DC338	CAP-805	0.1uF	0805B104K500NX	
DC350	CAP-805	0.1uF	0805B104K500NX	
DC351	CAP-805	0.1uF	0805B104K500NX	
DC352	CAP-805	omit	0805B104K500NX	
DC353	CAP-805	omit	0805B104K500NX	
DC354	CAP-805	omit	0805B104K500NX	
DC355	CAP-805	omit	0805B104K500NX	
DC356	CAP-805	0.1uF	0805B104K500NX	
DC357	CAP-805	0.1uF	0805B104K500NX	
DC358	CAP-805	0.1uF	0805B104K500NX	
DC359	CAP-805	0.1uF	0805B104K500NX	
DC360	CAP-805	0.1uF	0805B104K500NX	
DC361	CAP-805	0.1uF	0805B104K500NX	
DC362	CAP-805	0.1uF	0805B104K500NX	
DC363	CAP-805	0.1uF	0805B104K500NX	
DC364	CAP-805	0.1uF	0805B104K500NX	
DC365	CAP-805	0.1uF	0805B104K500NX	
DC366	CAP-805	0.1uF	0805B104K500NX	
DC367	CAP-805	0.1uF	0805B104K500NX	
DC368	CAP-805	0.1uF	0805B104K500NX	
DC369	CAP-805	0.1uF	0805B104K500NX	
DC370	CAP-805	0.1uF	0805B104K500NX	
DC371	CAP-805	0.1uF	0805B104K500NX	
DC372	CAP-805	0.1uF	0805B104K500NX	
DC373	CAP-805	0.1uF	0805B104K500NX	
DC374	CAP-805	0.1uF	0805B104K500NX	
DC375	CAP-805	0.1uF	0805B104K500NX	
DC376	CAP-805	0.1uF	0805B104K500NX	
DC377	CAP-805	0.1uF	0805B104K500NX	
DC378	CAP-805	0.1uF	0805B104K500NX	
DC379	CAP-805	0.1uF	0805B104K500NX	
DC380	CAP-805	0.1uF	0805B104K500NX	
DC381	CAP-805	0.1uF	0805B104K500NX	
DC382	CAP-805	0.1uF	0805B104K500NX	
DC383	CAP-805	0.1uF	0805B104K500NX	
DC384	CAP-805	0.1uF	0805B104K500NX	
DC385	CAP-805	0.1uF	0805B104K500NX	
DC386	CAP-805	0.1uF	0805B104K500NX	
DC387	CAP-805	0.1uF	0805B104K500NX	
DLY1	1/4 Watt thru hole	63.4 ohm 1% resistor	63R4-X-BK-ND	
DLY2	1/4 Watt thru hole	63.4 ohm 1% resistor		
DLY3	1/4 Watt thru hole	63.4 ohm 1% resistor	See note #1 in assembly notes	
DLY4	1/4 Watt thru hole	63.4 ohm 1% resistor		
DLY5	1/4 Watt thru hole	63.4 ohm 1% resistor		
DLY6	1/4 Watt thru hole	63.4 ohm 1% resistor		

DLY7	1/4 Watt thru hole	63.4 ohm 1% resistor		
DLY8	1/4 Watt thru hole	63.4 ohm 1% resistor		
DLY9	1/4 Watt thru hole	63.4 ohm 1% resistor		
DLY10	1/4 Watt thru hole	63.4 ohm 1% resistor		
DLY11	1/4 Watt thru hole	63.4 ohm 1% resistor		
DLY12	1/4 Watt thru hole	63.4 ohm 1% resistor		
DLY13	1/4 Watt thru hole	63.4 ohm 1% resistor		
DLY14	1/4 Watt thru hole	63.4 ohm 1% resistor		
DLY15	1/4 Watt thru hole	63.4 ohm 1% resistor		
DLY16	1/4 Watt thru hole	63.4 ohm 1% resistor		
DLY17	1/4 Watt thru hole	63.4 ohm 1% resistor		
DLY18	1/4 Watt thru hole	63.4 ohm 1% resistor		
DLY19	1/4 Watt thru hole	63.4 ohm 1% resistor		
DLY20	1/4 Watt thru hole	63.4 ohm 1% resistor		
DLY21	1/4 Watt thru hole	63.4 ohm 1% resistor		
DLY22	1/4 Watt thru hole	63.4 ohm 1% resistor		
DLY23	1/4 Watt thru hole	63.4 ohm 1% resistor		
DLY24	1/4 Watt thru hole	63.4 ohm 1% resistor		
DLY25	1/4 Watt thru hole	63.4 ohm 1% resistor		
DLY26	1/4 Watt thru hole	63.4 ohm 1% resistor		
DLY27	1/4 Watt thru hole	63.4 ohm 1% resistor		
DLY28	1/4 Watt thru hole	63.4 ohm 1% resistor		
DLY29	1/4 Watt thru hole	63.4 ohm 1% resistor		
DLY30	1/4 Watt thru hole	63.4 ohm 1% resistor		
DLY31	1/4 Watt thru hole	63.4 ohm 1% resistor		
DLY32	1/4 Watt thru hole	63.4 ohm 1% resistor		
DLY33	1/4 Watt thru hole	63.4 ohm 1% resistor		
DLY34	1/4 Watt thru hole	63.4 ohm 1% resistor		
DLY35	1/4 Watt thru hole	63.4 ohm 1% resistor		
DLY36	1/4 Watt thru hole	63.4 ohm 1% resistor		
F1	FUSE-SM	5 Amp		
F2	FUSE-SM	5 Amp		
F3	FUSE-SM	5 Amp		
F4	FUSE-SM	5 Amp		
J1	VME160P1	160 Pin VME	02.01.160.2101	Harting
J2	VME160P2	160 Pin VME		
J3	VME96-J1	96 Pin VME	650947-5	
J4	SCSI_CONN	100 pin Dual		Thomas and Betts
J5	LOGIC-ANALYZER	38 pin surface mount	AMP Inc.	
J6	LOGIC-ANALYZER	38 pin surface mount	AMP Inc.	
J7	JTAG	7 pin berg strip		
J8	LOGIC-ANALYZER	38 pin surface mount	AMP Inc.	
J9	VARC-MEZZ-PINS	30 pin board stacker	HW-15-10-L-D-535-SM	Samtec
J10	SCSI_CONN	100 pin Dual		Thomas and Betts
J11	VARC-MEZZ-PINS	30 pin board stacker	HW-15-10-L-D-535-SM	Samtec
J12	LOGIC-ANALYZER	38 pin surface mount	AMP Inc.	
J13	SCSI_CONN	100 pin Dual		Thomas and Betts
J14	VARC-MEZZ-PINS	30 pin board stacker	HW-15-10-L-D-535-SM	Samtec
J16	SCSI_CONN	100 pin Dual		Thomas and Betts
J17	VARC-MEZZ-PINS	30 pin board stacker	HW-15-10-L-D-535-SM	Samtec
J19	SCSI_CONN	100 pin Dual		Thomas and Betts
J20	VARC-MEZZ-PINS	30 pin board stacker	HW-15-10-L-D-535-SM	Samtec
J22	SCSI_CONN	100 pin Dual		Thomas and Betts
J23	VARC-MEZZ-PINS	30 pin board stacker	HW-15-10-L-D-535-SM	Samtec
J25	PC_LEMO	PC mount LEMO		
	18 Stand offs per VARC	7/8" (.875") height	36 4-40 screws	VMM-VARC

JMPR1	JUMPER	2 pin Berg Straight		
JMPR2	JUMPER	2 pin Berg Straight		
JMPR3	JUMPER	2 pin Berg Straight		
JMPR4	JUMPER	2 pin Berg Straight		
JMPR5	JUMPER	2 pin Berg Straight		
JMPR6	JUMPER	2 pin Berg Straight		
JMPR7	JUMPER	2 pin Berg Straight		
JMPR8	JUMPER	2 pin Berg Straight		
JMPR9	JUMPER	2 pin Berg Straight		
JMPR10	JUMPER	2 pin Berg Straight		
JMPR11	JUMPER	2 pin Berg Straight		
JMPR12	JUMPER	2 pin Berg Straight		
JMPR13	JUMPER	2 pin Berg Straight		
JMPR14	JUMPER	Wire loop jumper		
JMPR15	JUMPER	Wire loop jumper		
JMPR16	JUMPER	Wire loop jumper		
JMPR17	JUMPER	Wire loop jumper		
JMPR18	JUMPER	Wire loop jumper		
JMPR19	JUMPER	Wire loop jumper		
JMPR20	JUMPER	Wire loop jumper		
JMPR21	JUMPER	Wire loop jumper		
JMPR22	JUMPER	2 pin Berg Straight		
JMPR23	JUMPER	Wire loop jumper		
JMPR24	JUMPER	Wire loop jumper		
JMPR25	JUMPER	2 pin Berg Straight		
L1	CHOKE			
L2	CHOKE			
L3	CHOKE			
L4	CHOKE			
			See note #2 in assembly notes	
LED1	LED_W_RES	Red LED vertical	555-3009	Dialight
LED2	LED_W_RES	Red LED vertical	555-3009	Dialight
LED3	LED_W_RES	Red LED vertical	555-3009	Dialight
LED4	LED_BICOLOR	Bicolor LED, horizontal	550-3505	Dialight
LED5	LED_W_RES	Red LED vertical	555-3009	Dialight
LED6	LED_W_RES	Red LED vertical	555-3009	Dialight
LED7	LED_W_RES	Red LED vertical	555-3009	Dialight
LED8	LED_W_RES	Red LED vertical	555-3009	Dialight
LED9	LED_W_RES	Red LED vertical	555-3009	Dialight
PC1	CAP-POLAR-B	6.8uF Tantalum	B package	Garrett
PC2	CAP-POLAR-B	6.8uF Tantalum	B package	
PC3	CAP-POLAR-B	6.8uF Tantalum	B package	
PC4	CAP-POLAR-B	6.8uF Tantalum	B package	
PC5	CAP-POLAR-B	6.8uF Tantalum	B package	
PC6	CAP-POLAR-B	6.8uF Tantalum	B package	
PC7	CAP-POLAR-B	6.8uF Tantalum	B package	
PC8	CAP-POLAR-B	6.8uF Tantalum	B package	
PC9	CAP-POLAR-B	6.8uF Tantalum	B package	
PC10	CAP-POLAR-B	6.8uF Tantalum	B package	
R1	RES-805	10K		Garrett
R2	RES-805	10K		
R3	RES-805	10K		
R4	RES-805	10K		
R5	RES-1206-SM	omit		
R6	RES-1206-SM	10pf 1206 NPO cap		
R7	RES-1206-SM	omit		
R8	RES-1206-SM	10pf 1206 NPO cap		

R9	RES-805	10K		
R10	RES-805	10K		
R11	RES-805	10K		
R12	RES-805	10K		
R13	RES-805	120 ohm		
R14	RES-805	120 ohm		
R15	RES-1206-SM	omit		
R16	RES-805	10K		
R17	RES-805	120 ohm		
R18	RES-805	120 ohm		
R19	RES-805	120 ohm		
R20	RES-805	120 ohm		
R21	RES-805	120 ohm		
R22	RES-805	120 ohm		
R23	RES-1206-SM	10pf 1206 NPO cap		
R24	RES-1206-SM	10pf 1206 NPO cap		
R25	RES-1206-SM	omit		
R26	RES-1206-SM	10pf 1206 NPO cap		
R27	RES-1206-SM	omit		
R28	RES-1206-SM	10pf 1206 NPO cap		
R29	RES-1206-SM	omit		
R30	RES-805	10K		
R31	RES-805	10K		
R32	RES350	1M		
R33	RES-805	10K		
R34	RES-805	10K		
R35	RES350	1M		
R36	RES-805	10K		
R37	RES-805	10K		
R38	RES-805	10K		
R39	RES-805	10K		
R40	RES-805	10K		
R41	RES-805	10K		
R42	RES-805	330 ohms		
R43	RES-805	330 ohms		
R44	RES-805	120 ohm		
R45	RES-805	120 ohm		
R46	RES-805	120 ohm		
R47	RES-805	120 ohm		
R48	RES-805	10K		
R49	RES-805	10K		
R50	RES-1206-SM	10pf 1206 NPO cap		
R51	RES-1206-SM	omit		
R52	RES-1206-SM	omit		
R53	RES-1206-SM	10pf 1206 NPO cap		
R54	RES-1206-SM	omit		
R55	RES-1206-SM	10pf 1206 NPO cap		
R56	RES-805	10pf 1206 NPO cap		
R57	RES-1206-SM	omit		
R58	RES-1206-SM	10pf 1206 NPO cap		
R59	RES-805	120 ohm		
R60	RES-805	120 ohm		
R61	RES-805	120 ohm		
R62	RES-805	120 ohm		
R63	RES-805	10K		
R64	RES-805	10K		
R65	RES-1206-SM	omit		
R66	RES-1206-SM	10pf 1206 NPO cap		
R67	RES-1206-SM	omit		
R68	RES-1206-SM	10pf 1206 NPO cap		

R69	RES-805	120 ohm		
R70	RES-805	120 ohm		
R71	RES-805	120 ohm		
R72	RES-805	120 ohm		
R73	RES-805	10K		
R74	RES-805	10K		
R75	RES-1206-SM	10pf 1206 NPO cap		
R76	RES-1206-SM	omit		
R77	RES-1206-SM	omit		
R78	RES-1206-SM	10pf 1206 NPO cap		
R79	RES-1206-SM	omit		
R80	RES-1206-SM	10pf 1206 NPO cap		
R81	RES-805	10K		
R82	RES-1206-SM	omit		
R83	RES-1206-SM	10pf 1206 NPO cap		
R84	RES-805	120 ohm		
R85	RES-805	120 ohm		
R86	RES-805	120 ohm		
R87	RES-805	120 ohm		
R88	RES-805	10K		
R89	RES-805	10K		
R90	RES-1206-SM	omit		
R91	RES-1206-SM	10pf 1206 NPO cap		
R92	RES-1206-SM	omit		
R93	RES-1206-SM	10pf 1206 NPO cap		
R94	RES-805	120 ohm		
R95	RES-805	120 ohm		
R96	RES-805	120 ohm		
R97	RES-805	120 ohm		
R98	RES-805	10K		
R99	RES-805	10K		
R100	RES-1206-SM	10pf 1206 NPO cap		
R101	RES-1206-SM	omit		
R102	RES-1206-SM	omit		
R103	RES-1206-SM	10pf 1206 NPO cap		
R104	RES-1206-SM	omit		
R105	RES-1206-SM	10pf 1206 NPO cap		
R106	RES-805	10K		
R107	RES-1206-SM	omit		
R108	RES-1206-SM	10pf 1206 NPO cap		
R109	RES-805	120 ohm		
R110	RES-805	120 ohm		
R111	RES-805	120 ohm		
R112	RES-805	120 ohm		
R113	RES-805	10K		
R114	RES-805	10K		
R115	RES-1206-SM	omit		
R116	RES-1206-SM	10pf 1206 NPO cap		
R117	RES-1206-SM	omit		
R118	RES-1206-SM	10pf 1206 NPO cap		
R119	RES-805	120 ohm		
R120	RES-805	120 ohm		
R121	RES-805	120 ohm		
R122	RES-805	120 ohm		
R123	RES-805	10K		
R124	RES-805	10K		
R125	RES-1206-SM	10pf 1206 NPO cap		
R126	RES-1206-SM	omit		
R127	RES-1206-SM	omit		
R128	RES-1206-SM	10pf 1206 NPO cap		

R129	RES-1206-SM	omit		
R130	RES-1206-SM	10pf 1206 NPO cap		
R131	RES-805	10K		
R132	RES-1206-SM	omit		
R133	RES-1206-SM	10pf 1206 NPO cap		
R134	RES-805	120 ohm		
R135	RES-805	120 ohm		
R136	RES-805	120 ohm		
R137	RES-805	120 ohm		
R138	RES-805	10K		
R139	RES-805	10K		
R140	RES-1206-SM	omit		
R141	RES-1206-SM	10pf 1206 NPO cap		
R142	RES-1206-SM	omit		
R143	RES-1206-SM	10pf 1206 NPO cap		
R144	RES-805	120 ohm		
R145	RES-805	120 ohm		
R146	RES-805	120 ohm		
R147	RES-805	120 ohm		
R148	RES-805	10K		
R149	RES-805	10K		
R150	RES-1206-SM	10pf 1206 NPO cap		
R151	RES-1206-SM	omit		
R152	RES-1206-SM	omit		
R153	RES-1206-SM	10pf 1206 NPO cap		
R154	RES-1206-SM	omit		
R155	RES-1206-SM	10pf 1206 NPO cap		
R156	RES-805	10K		
R157	RES-1206-SM	omit		
R158	RES-1206-SM	10pf 1206 NPO cap		
R159	RES-805	120 ohm		
R160	RES-805	120 ohm		
R161	RES-805	120 ohm		
R162	RES-805	120 ohm		
R163	RES-805	10K		
R164	RES-805	10K		
R165	RES-1206-SM	omit		
R166	RES-1206-SM	10pf 1206 NPO cap		
R167	RES-1206-SM	omit		
R168	RES-1206-SM	10pf 1206 NPO cap		
R169	RES-805	10K		
R170	RES-805	10K		
R171	RES-805	10K		
R172	RES-805	10K		
R173	RES-805	10K		
R174	RES-1206-SM	1K		
R175	RES-1206-SM	1K		
R176	RES-1206-SM	1K		
R177	RES-1206-SM	1K		
R178	RES-1206-SM	1K		
R179	RES-805	0 ohm		
R180	RES-805	0 ohm		
R181	RES-805	100 ohm		
R182	RES-805	100 ohm		
R183	RES-805	0 ohm		
R184	RES-805	0 ohm		
R185	RES-805	100 ohm		
R186	RES-805	100 ohm		
R187	RES-805	0 ohm		
R188	RES-805	0 ohm		

R189	RES350	1M		
R190	RES350	1M		
R191	RES-805	0 ohm		
R192	RES-805	0 ohm		
R193	RES-805	10K		
R194	RES-805	10K		
R195	RES-805	10K		
R196	RES-805	10K		
R197	RES-805	10K		
R198	RES-805	10K		
R199	RES-805	10K		
R200	RES-805	10K		
R201	RES-805	10K		
R202	RES-805	10K		
R203	RES-805	10K		
R204	RES-805	10K		
R205	RES-805	10K		
R206	RES-805	10K		
R207	RES-805	10K		
R208	RES-805	10K		
R209	RES-805	10K		
R210	RES-805	10K		
R211	RES-805	10K		
R212	RES-805	10K		
R213	RES-805	Omit		
R214	RES-805	Omit		
R215	RES-805	0 ohm		
R216	RES-805	10K		
REG1	LP3963	LP3963ES-2.5		
REG2	LP3963	LP3963ES-2.5		
U1	SSOP 48 Pin .025 pitch	CY74FCT16244T-O		Cypress Semiconductor
U2	QFP 64 pin .031 pitch	CY7C964		Cypress Semiconductor
U3	QFP 64 pin .031 pitch	CY7C964		Cypress Semiconductor
U4	QFP 64 pin .031 pitch	CY7C964		Cypress Semiconductor
U5	QFP 64 pin .031 pitch	CY7C964		Cypress Semiconductor
U6	TSSOP 48 Pin .020 pitch	CY74FCT16245T-Z		Cypress Semiconductor
U7	QFP 64 pin .031 pitch	CY7C4225		Cypress Semiconductor
U8	SOIJ16 16 pin .050 pitch	DS90C031		National Semiconductor
U9	QFP 64 pin .031 pitch	CY7C960-N65		Cypress Semiconductor
U10	QFP 240 pin .020 pitch	VIRTEX2.5-PQ240		Xilinx
U11	SOIJ16 16 pin .050 pitch	DS90C032		National Semiconductor
U12	SOIJ16 16 pin .050 pitch	DS90C031		National Semiconductor
U13	SOIJ16 16 pin .050 pitch	DS90C031		National Semiconductor
U14	SOIJ16 16 pin .050 pitch	DS90C031		National Semiconductor
U15	SOIJ16 16 pin .050 pitch	DS90C031		National Semiconductor
U16	SOIJ16 16 pin .050 pitch	DS90C031		National Semiconductor
U17	SOIJ16 16 pin .050 pitch	DS90C032		National Semiconductor
U18	SOIJ16 16 pin .050 pitch	DS90C031		National Semiconductor
U19	SOIJ16 16 pin .050 pitch	DS90C031		National Semiconductor
U20	SOIJ16 16 pin .050 pitch	DS90C031		National Semiconductor
U21	SOIJ16 16 pin .050 pitch	DS90C031		National Semiconductor
U22	SOIJ16 16 pin .050 pitch	DS90C032		National Semiconductor
U23	SOL20 20 pin .050 pitch	74ACT244SC		Digi-Key
U24	TQ144 .020 pitch	XSC10-TQ144		Xilinx
U25	TSOP 44 pin .031 pitch	CY7C1020-TS		Cypress Semiconductor
U26	TSOP 44 pin .031 pitch	CY7C1020-TS		Cypress Semiconductor
U27	TSOP 44 pin .031 pitch	CY7C1020-TS		Cypress Semiconductor
U28	TSOP 44 pin .031 pitch	CY7C1020-TS		Cypress Semiconductor

U29	SOIJ16 16 pin .050 pitch	DS90C032		National Semiconductor
U30	SOIJ16 16 pin .050 pitch	DS90C032		National Semiconductor
U31	SOIJ16 16 pin .050 pitch	DS90C031		National Semiconductor
U32	PLCC44	XC1802PC44	44pin socket	Xilinx
U33	SSOP 48 Pin .025 pitch	CY74FCT16244T-O		Cypress Semiconductor
U34	SSOP 48 Pin .025 pitch	CY74FCT16244T-O		Cypress Semiconductor
U35	SSOP 48 Pin .025 pitch	CY74FCT16244T-O		Cypress Semiconductor
U36	SSOP 48 Pin .025 pitch	CY74FCT16244T-O		Cypress Semiconductor
U37	SSOP 48 Pin .025 pitch	CY74FCT16244T-O		Cypress Semiconductor
U38	SSOP 48 Pin .025 pitch	CY74FCT16244T-O		Cypress Semiconductor
U39	SSOP 48 Pin .025 pitch	CY74FCT16244T-O		Cypress Semiconductor
U40	QFP 240 pin .020 pitch	VIRTEX2.5-PQ240		Xilinx
U41	TSOP 44 pin .031 pitch	CY7C1020-TS		Cypress Semiconductor
U42	8 Pin DIP	PROM	8pin socket	
U43	8 Pin DIP	PROM	8pin socket	
U44	SOIJ16 16 pin .050 pitch	DS90C032		National Semiconductor
U45	SOIJ16 16 pin .050 pitch	DS90C032		National Semiconductor
U46	SOIJ16 16 pin .050 pitch	DS90C031		National Semiconductor
U47	SOIJ16 16 pin .050 pitch	DS90C031		National Semiconductor
U48	SOL20 20 pin .050 pitch	74ACT244SC		Digi-Key
U49	QFP 240 pin .020 pitch	VIRTEX2.5-PQ240		Xilinx
U50	SOIJ16 16 pin .050 pitch	DS90C031		National Semiconductor
U51	SOIJ16 16 pin .050 pitch	DS90C031		National Semiconductor
U52	SOIJ16 16 pin .050 pitch	DS90C032		National Semiconductor
U53	SOIJ16 16 pin .050 pitch	DS90C031		National Semiconductor
U54	SOIJ16 16 pin .050 pitch	DS90C032		National Semiconductor
U55	QFP 64 pin .031 pitch	CY7C4225		Cypress Semiconductor
U56	SOIJ16 16 pin .050 pitch	DS90C031		National Semiconductor
U57	SOIJ16 16 pin .050 pitch	DS90C031		National Semiconductor
U58	SOIJ16 16 pin .050 pitch	DS90C031		National Semiconductor
U59	SOIJ16 16 pin .050 pitch	DS90C031		National Semiconductor
U60	SOIJ16 16 pin .050 pitch	DS90C031		National Semiconductor
U61	SOIJ16 16 pin .050 pitch	DS90C032		National Semiconductor
U62	SOIJ16 16 pin .050 pitch	DS90C031		National Semiconductor
U63	SOIJ16 16 pin .050 pitch	DS90C031		National Semiconductor
U64	SOL20 20 pin .050 pitch	74ACT244SC		Digi-Key
U65	QFP 240 pin .020 pitch	VIRTEX2.5-PQ240		Xilinx
U66	SOIJ16 16 pin .050 pitch	DS90C031		National Semiconductor
U67	SOIJ16 16 pin .050 pitch	DS90C031		National Semiconductor
U68	SOIJ16 16 pin .050 pitch	DS90C032		National Semiconductor
U69	SOIJ16 16 pin .050 pitch	DS90C031		National Semiconductor
U70	SOIJ16 16 pin .050 pitch	DS90C032		National Semiconductor
U71	QFP 64 pin .031 pitch	CY7C4225		
U72	SOIJ16 16 pin .050 pitch	DS90C031		National Semiconductor
U73	SOIJ16 16 pin .050 pitch	DS90C031		National Semiconductor
U74	SOIJ16 16 pin .050 pitch	DS90C031		National Semiconductor
U75	SOIJ16 16 pin .050 pitch	DS90C031		National Semiconductor
U76	SOIJ16 16 pin .050 pitch	DS90C031		National Semiconductor
U77	SOIJ16 16 pin .050 pitch	DS90C032		National Semiconductor
U78	SOIJ16 16 pin .050 pitch	DS90C031		National Semiconductor
U79	SOIJ16 16 pin .050 pitch	DS90C031		National Semiconductor
U80	SOL20 20 pin .050 pitch	74ACT244SC		Digi-Key
U81	QFP 240 pin .020 pitch	VIRTEX2.5-PQ240		Xilinx
U82	SOIJ16 16 pin .050 pitch	DS90C031		National Semiconductor
U83	SOIJ16 16 pin .050 pitch	DS90C031		National Semiconductor
U84	SOIJ16 16 pin .050 pitch	DS90C032		National Semiconductor
U85	SOIJ16 16 pin .050 pitch	DS90C031		National Semiconductor
U86	SOIJ16 16 pin .050 pitch	DS90C032		National Semiconductor
U87	QFP 64 pin .031 pitch	CY7C4225		
U88	SOIJ16 16 pin .050 pitch	DS90C031		National Semiconductor

U89	SOIJ16 16 pin .050 pitch	DS90C031		National Semiconductor
U90	SOIJ16 16 pin .050 pitch	DS90C031		National Semiconductor
U91	SOIJ16 16 pin .050 pitch	DS90C031		National Semiconductor
U92	SOIJ16 16 pin .050 pitch	DS90C031		National Semiconductor
U93	SOIJ16 16 pin .050 pitch	DS90C032		National Semiconductor
U94	SOIJ16 16 pin .050 pitch	DS90C031		National Semiconductor
U95	SOIJ16 16 pin .050 pitch	DS90C031		National Semiconductor
U96	SOL20 20 pin .050 pitch	74ACT244SC		Digi-Key
U97	QFP 240 pin .020 pitch	VIRTEX2.5-PQ240		Xilinx
U98	SOIJ16 16 pin .050 pitch	DS90C031		National Semiconductor
U99	SOIJ16 16 pin .050 pitch	DS90C031		National Semiconductor
U100	SOIJ16 16 pin .050 pitch	DS90C032		National Semiconductor
U101	SOIJ16 16 pin .050 pitch	DS90C031		National Semiconductor
U102	SOIJ16 16 pin .050 pitch	DS90C032		National Semiconductor
U103	QFP 64 pin .031 pitch	CY7C4225		
U104	SOIJ16 16 pin .050 pitch	DS90C031		National Semiconductor
U105	SOIJ16 16 pin .050 pitch	DS90C031		National Semiconductor
U106	SOIJ16 16 pin .050 pitch	DS90C031		National Semiconductor
U107	SOIJ16 16 pin .050 pitch	DS90C031		National Semiconductor
U108	SOIJ16 16 pin .050 pitch	DS90C031		National Semiconductor
U109	SOIJ16 16 pin .050 pitch	DS90C032		National Semiconductor
U110	SOIJ16 16 pin .050 pitch	DS90C031		National Semiconductor
U111	SOIJ16 16 pin .050 pitch	DS90C031		National Semiconductor
U112	SOL20 20 pin .050 pitch	74ACT244SC		Digi-Key
U113	QFP 240 pin .020 pitch	VIRTEX2.5-PQ240		Xilinx
U114	SOIJ16 16 pin .050 pitch	DS90C031		National Semiconductor
U115	SOIJ16 16 pin .050 pitch	DS90C031		National Semiconductor
U116	SOIJ16 16 pin .050 pitch	DS90C032		National Semiconductor
U117	SOIJ16 16 pin .050 pitch	DS90C031		National Semiconductor
U118	SOIJ16 16 pin .050 pitch	DS90C032		National Semiconductor
U119	QFP 64 pin .031 pitch	CY7C4225		Cypress Semiconductor
U120	SOIJ16 16 pin .050 pitch	DS90C031		National Semiconductor
U121	SOIJ16 16 pin .050 pitch	DS90C031		National Semiconductor
U122	SOIJ16 16 pin .050 pitch	DS90C031		National Semiconductor
U123	SOIJ16 16 pin .050 pitch	DS90C031		National Semiconductor
U124	SOIJ16 16 pin .050 pitch	DS90C031		National Semiconductor
U125	SOL20 20 pin .050 pitch	74ACT244SC		Digi-Key
U126	TSSOP 48 Pin .020 pitch	CY74FCT16245T-Z		
X1	40MHz oscillator	CRYSTAL	14pin ic socket, Use pins	Raltron
			1,7,8,14 others removed	
			or clipped	

Programming for Your New MINOS VARC

An example of register values

N. Felt

6 March 2001

Note: Τηισ δοχυμεντ ισ υνδερ χονστρυχτιον ανδ υνδεργοεσ φρεθυεντ χηανγεσ. Πλεασε χονσυλτ τηε λατεστ ϖερσιον.

1. Initialization

When the VARC is powered up there are certain registers that must be set to a predetermined value.

1.1. VARC Initialization

e *is the ETC number (0-5)*
bb *is the board address*

0x***bb***3***e*** 0018	<=	0x00	--set etc to disabled
0x***bb***3***e*** 0040	<=	0x07	--set etc to enable all chips on FEB 0
0x***bb***3***e*** 0048	<=	0x28	--hold delay
0x***bb***3***e*** 0050	<=	0x04	--VA clock period
0x***bb***40 0018	<=	0x24	--enable 50ms buffer switching, put in Sparsifier in run mode

1.2. Slow-Control

Before writing to each register you must check to see the Slo-controls are not busy. This can be done by reading the status register. For VFB0 bias settings the DAC addresses are as follows:

0x***bb***20 01E0	=>		--bit 1 indicates it is busy, wait until this is 0
0x***bb***20 0000	<=	0X50	--Vfp
0x***bb***20 01E0	=>		--bit 1 indicates it is busy, wait until this is 0
0x***bb***20 0004	<=	0X02	--Vfs
0x***bb***20 01E0	=>		--bit 1 indicates it is busy, wait until this is 0
0x***bb***20 0008	<=	0X7D	--Sha-bias
0x***bb***20 01E0	=>		--bit 1 indicates it is busy, wait until this is 0
0x***bb***20 000C	<=	0X30	--Trigger threshold
0x***bb***20 01E0	=>		--bit 1 indicates it is busy, wait until this is 0
0x***bb***20 0010	<=	0X40	--Calibration charge
0x***bb***20 01E0	=>		--bit 1 indicates it is busy, wait until this is 0
0x***bb***20 0018	<=	0X00	--Turn all voltages on

This would be the settings for VFB1

0x***bb***20 01E0	=>		--bit 1 indicates it is busy, wait until this is 0
0x***bb***20 0020	<=	0X50	--Vfp
0x***bb***20 01E0	=>		--bit 1 indicates it is busy, wait until this is 0
0x***bb***20 0024	<=	0X02	--Vfs
0x***bb***20 01E0	=>		--bit 1 indicates it is busy, wait until this is 0
0x***bb***20 0028	<=	0X7D	--Sha-bias
0x***bb***20 01E0	=>		--bit 1 indicates it is busy, wait until this is 0
0x***bb***20 002C	<=	0X30	--Trigger threshold
0x***bb***20 01E0	=>		--bit 1 indicates it is busy, wait until this is 0
0x***bb***20 0030	<=	0X40	--Calibration charge
0x***bb***20 01E0	=>		--bit 1 indicates it is busy, wait until this is 0
0x***bb***20 0038	<=	0X00	--Turn all voltages on

After the board is initialized the VARC is then in disabled mode. From this mode the board can then be set to Cal-inj mode, Triggerless-pedestal mode, Run mode or a test mode.

2. Disabled Mode

0x***bb***3***e*** 0018	and	1111 1100	--set etc to disabled
0x***bb***40 0018	and	1111 1110	-- turn Sparsifier test bit off
0x***bb***40 0018	or	0000 0100	-- take Sparsifier out of test mode

3. Cal-inject mode

3.1. Single Shot

0x***bb***3***e*** 0018	and	1111 0101	--set ETC (0-5) to Cal-inject
0x***bb***3***e*** 0018	or	0000 0001	--set ETC (0-5) to Cal- inject
0x***bb***40 0018	and	1111 1110	-- turn Sparsifier test bit off
0x***bb***40 0018	or	0000 0100	-- put Sparsifier in run mode

While in single-shot mode every time a word is written to the CAL_TRIG_XQT_CTRL register one 64-bit data word will be produced.

For example to cal-inject FEB 0, chip 1 channel 6 while in this mode we would simply write to the following register.

0x*bb*30 0038	<=	0x01 06	--do cal-inject to specified chip

If the register is written too frequently the charge injected will be reduced. This can be avoided with a delay of at least 1ms between cal-injects.

3.2. Automatic

0x***bb***3***e*** 0018	and	1111 1101	--set ETC (0-5) to Auto Cal-inject
0x***bb***3***e*** 0018	or	0000 1001	--set ETC (0-5) to Auto Cal-inject
0x***bb***40 0018	and	1111 1110	-- turn Sparsifier test bit off
0x***bb***40 0018	or	0000 0100	-- put Sparsifier in run mode

While the VARC is in automatic Cal-inject mode, it will produce one 64-bit data word for every XQT signal it sees. If the XQT signal is too frequent the charge injected will be reduced. This can be avoided with an XQT period > 1ms.

The VARC automatically cycles through all enabled chips. The situation where a chip is enabled but not installed will create errors. Chips are enabled using the CHIP_TRIG_ENABLE_REGISTER

4. Triggerless-pedestal mode

In Triggerless-pedestal mode the chips are read out in the same manner as if a trigger was actually received from the FEB. Therefore, the data can be read from the VME buffers in the same manner as in Run mode. Each Triggerless-pedestal command has the potential of creating large amounts of data. Care must be taken to avoid overflowing the VME readout buffer.

4.1. Single Shot

0x***bb***3***e*** 0018	and	1111 1110	--set ETC (0-5) to Triggerless-pedestal
0x***bb***3***e*** 0018	or	0000 0010	--set ETC (0-5) to Triggerless-pedestal
0x***bb***40 0018	and	1111 1110	-- turn Sparsifier test bit off
0x***bb***40 0018	or	0000 0100	-- put Sparsifier in run mode

While in single-shot mode sparsification is automatically disabled; therefore, every time a word is written to the CAL_TRIG_XQT_CTRL register 22 64-bit data word will be produced for each chip.

For example to read the pedestals of FEB 0, chip 0 chip1 and chip3, while in this mode we would simply write to the following register.

0x*bb*30 0038	<=	0x00 07	--do cal-inject to specified chip

Since we are reading the pedestals from 3 chips we will expect to see 66 64-bit data words in the output buffer.

4.2. Automatic

0x***bb***3***e*** 0018	and	1111 1110	--set ETC (0-5) to Auto Triggerless-pedestal
0x***bb***3***e*** 0018	or	0000 1010	--set ETC (0-5) to Auto Triggerless-pedestal
0x***bb***40 0018	and	1111 1110	-- turn Sparsifier test bit off
0x***bb***40 0018	or	0000 0100	-- put Sparsifier in run mode

While the VARC is in automatic mode, it will produce 22 64-bit data words for every XQT signal it sees. The VARC automatically cycles through all enabled chips. Chips are enabled using the CHIP_TRIG_ENABLE_REGISTER

5. Run Mode

In this mode the VARC will be processing triggers and filling the output buffers.

0x***bb***3***e*** 0018	or	0000 0011	--set ETC (0-5) to run
0x***bb***40 0018	and	1111 1110	-- turn Sparsifier test bit off
0x***bb***40 0018	or	0000 0100	-- take Sparsifier out of test mode

6. Buffer Readout

Reading data from the VME buffers is the same for any mode the VARC is in. The contents of the buffers can be read using the external 50ms buffer switch or it can manually switch the buffers using a VME command.

6.1. Manual VME method

This method gives the user control of the buffer switching, thus, control of the speed the data is read out. To use this readout method, bit 5 in the Sparsifier control register must be set to a 0 BEFORE data is written to the buffers. This should be done when changing running modes.

0x***bb***40 0018	and	1101 1111	--manual VME select

While in Manual VME readout mode, every time the buffer is switched, by flipping bit 6, the amount of data and valid buffer can be read from BUFFER_LEVEL_U and BUFFER_LEVEL_L.

0x***bb***40 0018	xor	0100 0000	-- switch buffer

0x***bb***40 0038 -- read lower byte of amount of data words available.
0x***bb***40 0040 -- read upper amount of data words available and from what buffer

Read correct amount of data from the buffers

6.2. 50 ms Interrupt method

To use this readout method, bit 5 in the Sparsifier control register must be set to a 1 BEFORE data is written to the buffers. This should be done when changing running modes.

0x***bb***40 0018 or 0010 0000 --manual VME select

The Interrupt method is similar to the Manual VME method except the buffers switch automatically every 50 ms. When the buffers switch an interrupt will be generated and the amount of data and valid buffer can be read from BUFFER_LEVEL_U and BUFFER_LEVEL_L.

0x***bb***40 0038 -- read lower byte of amount of data words available.
0x***bb***40 0040 -- read upper amount of data words available and from what buffer

Read correct amount of data from the buffers

7. Setting Pedestal and Threshold RAM

7.1. Pedestals

Once the pedestal and threshold has been determined for each channel of each chip the value must be written to the memory on the VARC. The format of the RAM address bits is as follows:

Bit13
0 Select Threshold
1 Select Pedestal

Bit[12:10]
Select ETC 0-5 (1 of 6)

Bit9
Select VFB 0-1 (1 of 2)

Bit[8:7]
Select VA chip 0-2 (1 of 3)

Bit[6:2]
Select VA Channel 0-21 (1 of 22)

Bit1
Always 0

Bit0
Always 0

For example to write the Pedestal value of 0x0A for channel 6, chip 1, VFB0, ETC 0 you would write to the following register:

0x***bb***60 2098 <= 0X0A

To write the Threshold value of 0x05 for channel 6, chip 1, VFB0, ETC 0 you would write to the following register:

0x***bb***60 0098 <= 0X05

Since this memory is not dual-ported you will not be able to write to this memory while VA chip data is being processed. This means during run mode, cal-inject operations or triggerless-pedestal operations. You can only write to this memory when the memory is not otherwise busy. The memory is not busy in disabled mode. The memory is also not busy when in triggerless-pedestal mode when not processing triggerless-pedestals.

8. How do I know if my VARC is working?

If you suspect your VARC might not be properly working there are a few functional checks you can do without using a test-stand.

8.1. Error Registers

The error registers in each FPGA can give clues to what is going wrong. If there is an error in any FPGA it will be reported to the Master Clock. By checking this status bit you can find out if an error has been produced. You can find out the specific error and clear the error by reading each error register in all FPGAs.

0x***bb***10 0018 If bit 1 is set there is an error. You need to read ETC and Sparsifier errors

0x***bb***3***e*** 0060 Check for ETC errors
0x***bb***40 0060 Check for Sparsifier errors

The specific errors that correspond to each bit can be found in the users manual.

8.2. Buffer Test Pattern

Bit # 6 in Sparsifier control register selects which buffer the test pattern will be written to. writing 0 selects buffer A and writing a 1 selects buffer B. Bit # 2 selects if the Sparsifier is in test mode or normal mode. Writing 0 in bit 2 will put the Sparsifier in test mode. Writing a 1 to bit 0 will begin the process of writing to the buffers. This bit must be cleared out with a 0 before the test pattern can be written again.

0x***bb***40 0018	and	1001 1010	-- put Sparsifier in test mode and select buffer A
0x***bb***40 0020	= >		-- check to see that the buffers are not busy
0x***bb***40 0018	or	0000 0001	-- initiate the writing of the test pattern to buffer A
0x***bb***40 0018	and	1101 1010	-- put Sparsifier in test mode and clear b it 0
0x***bb***40 0018	or	0100 0000	-- select buffer B
0x***bb***40 0020	= >		-- check to see that the buffers are not busy
0x***bb***40 0018	or	0000 0001	-- initiate the writing of the test pattern to buffer B

The VME buffer memory should now contain the buffer test pattern and can be read when the buffers are not busy being written into.

8.3. Data flow from ETC to VME buffer

If you think the data in your buffer is not correct you can tell the ETC to generate a known set of ADC data values. The ETC will produce ADC values that are equal to the channel numbers. Channe1 1 will have an ADC value of 1. Channel 2 will have an ADC value of 2. This is with the exception of channel 0 which will hold the common-mode-correction value.

0x***bb***30 0018 or 0000 0100 -- Turn on fake data

When you are finished with this mode you must turn off this bit

0x***bb***30 0018 and 1111 1011 -- Turn off fake data

It does not matter when this bit is turned on or off. The timing doesn't matter. You can use this fact to test the VARC when you think it is stuck in a mode that is creating errors. If you ever see suspicious data being produced by the VARC you would simply turn on this bit and a known set of data should be produced. If the data is other then the expected then there is something wrong with VARC.

One test we commonly do is with the triggerless-pedestal mode. In this mode we do not need a FEB or VMM. You do a triggerless-pedestal run on any set of chips using the ETC to generate the data. This is a good way to determine everything is working properly with the VARC and everything downstream. You should see 22 channels for each chip you trigger with sparsification, pedestal subtraction and common-mode-correction off. All ADC values will be equal to the channel number.

If the previous test seems to be working you can connect the VMM with the FEB disconnected. When the ETC data generation is off you should see somewhat constant ADC values with noise ~ 2 ADC counts. This is with the exception of channel 0 which is the common-mode-correction value.

8.4. Cal-injects

Cal-injects are also a nice way of testing the electronics including the FEB. Please see the section on Cal_injects.

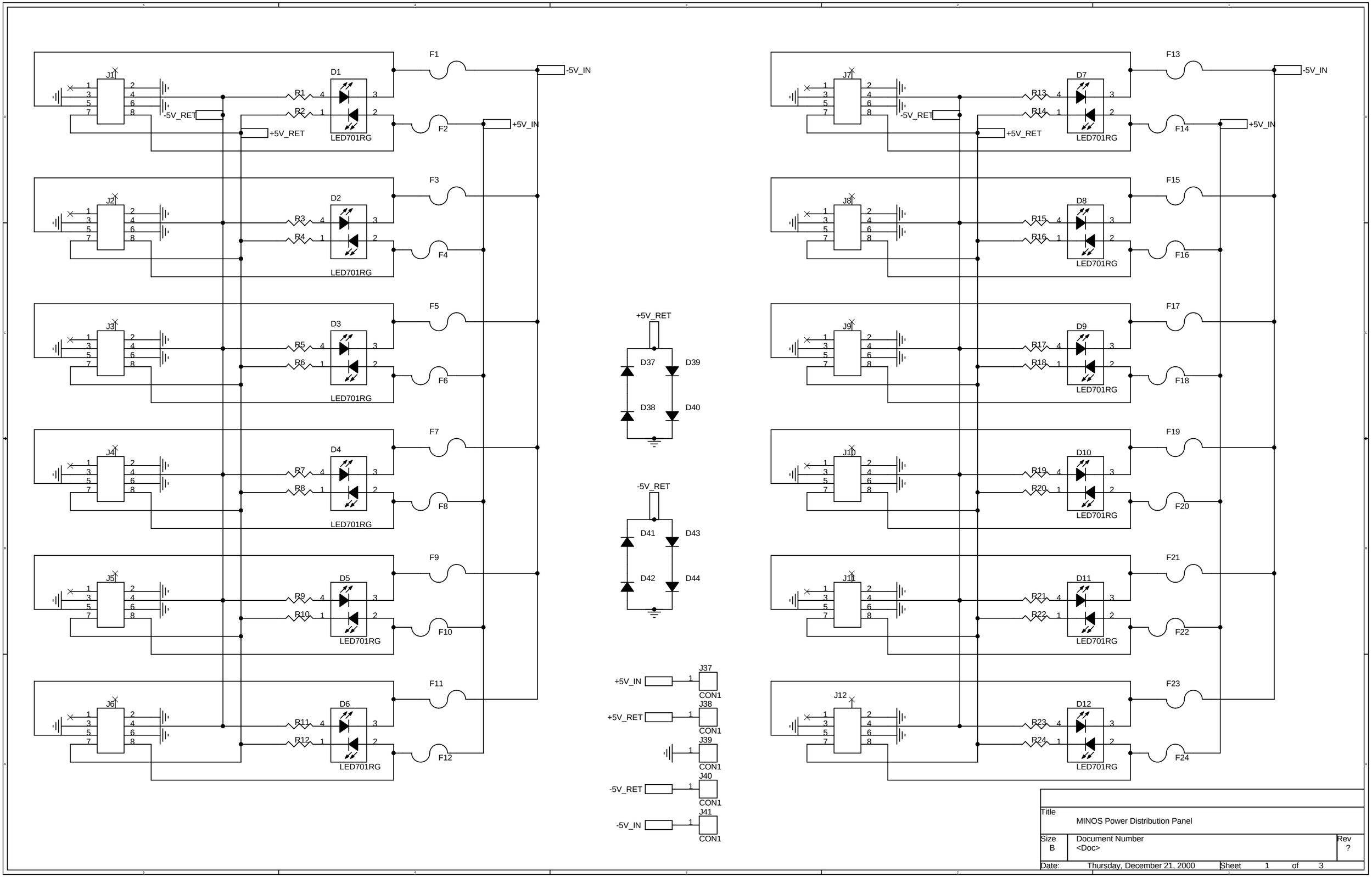

Title	MINOS Power Distribution Panel	
Size B	Document Number <Doc>	Rev ?
Date: Thursday, December 21, 2000	Sheet 1 of 3	

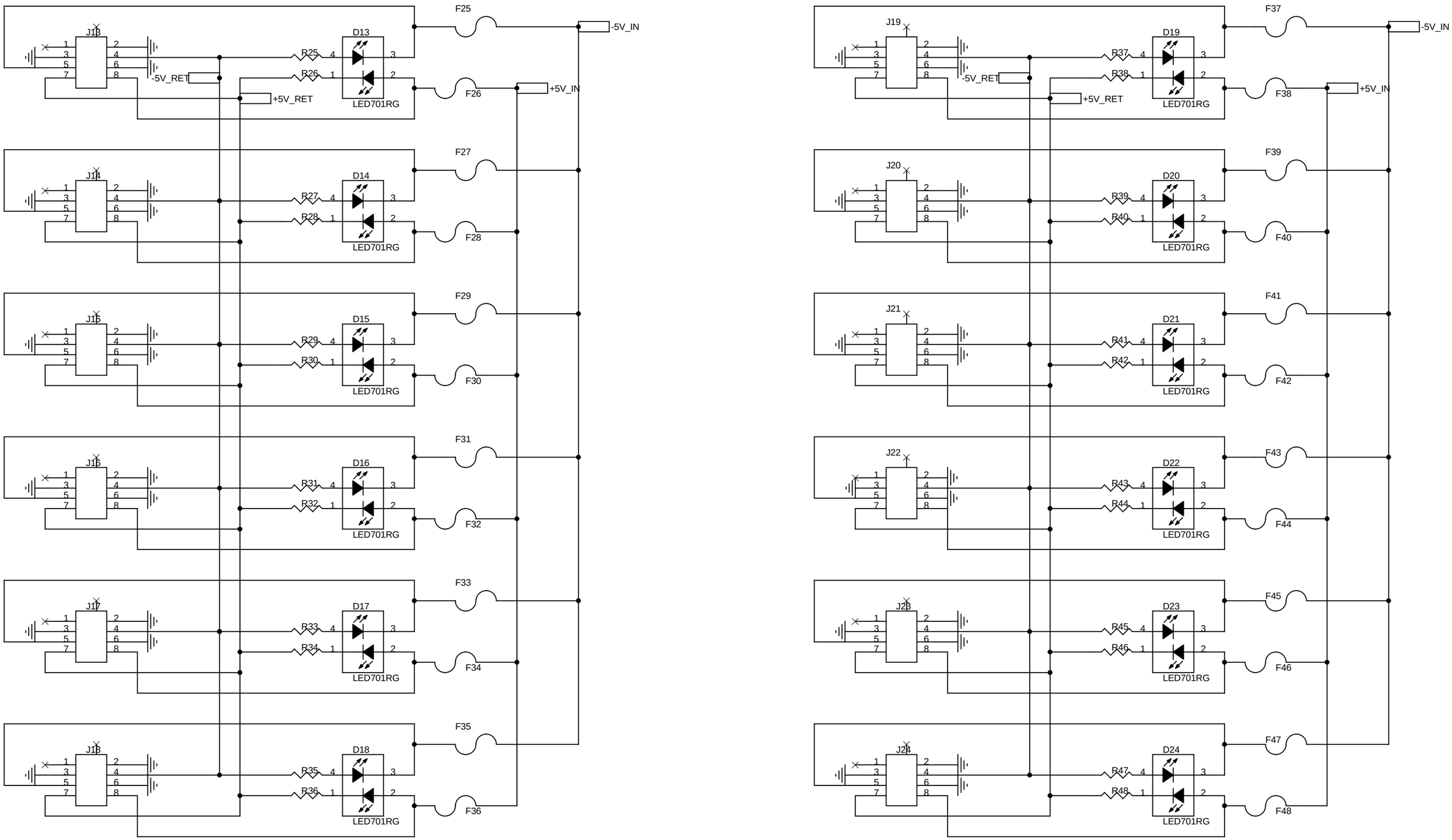

Title	MINOS Power Distribution Panel	
Size B	Document Number <Doc>	Rev ?
Date: Thursday, December 21, 2000	Sheet 2 of 3	

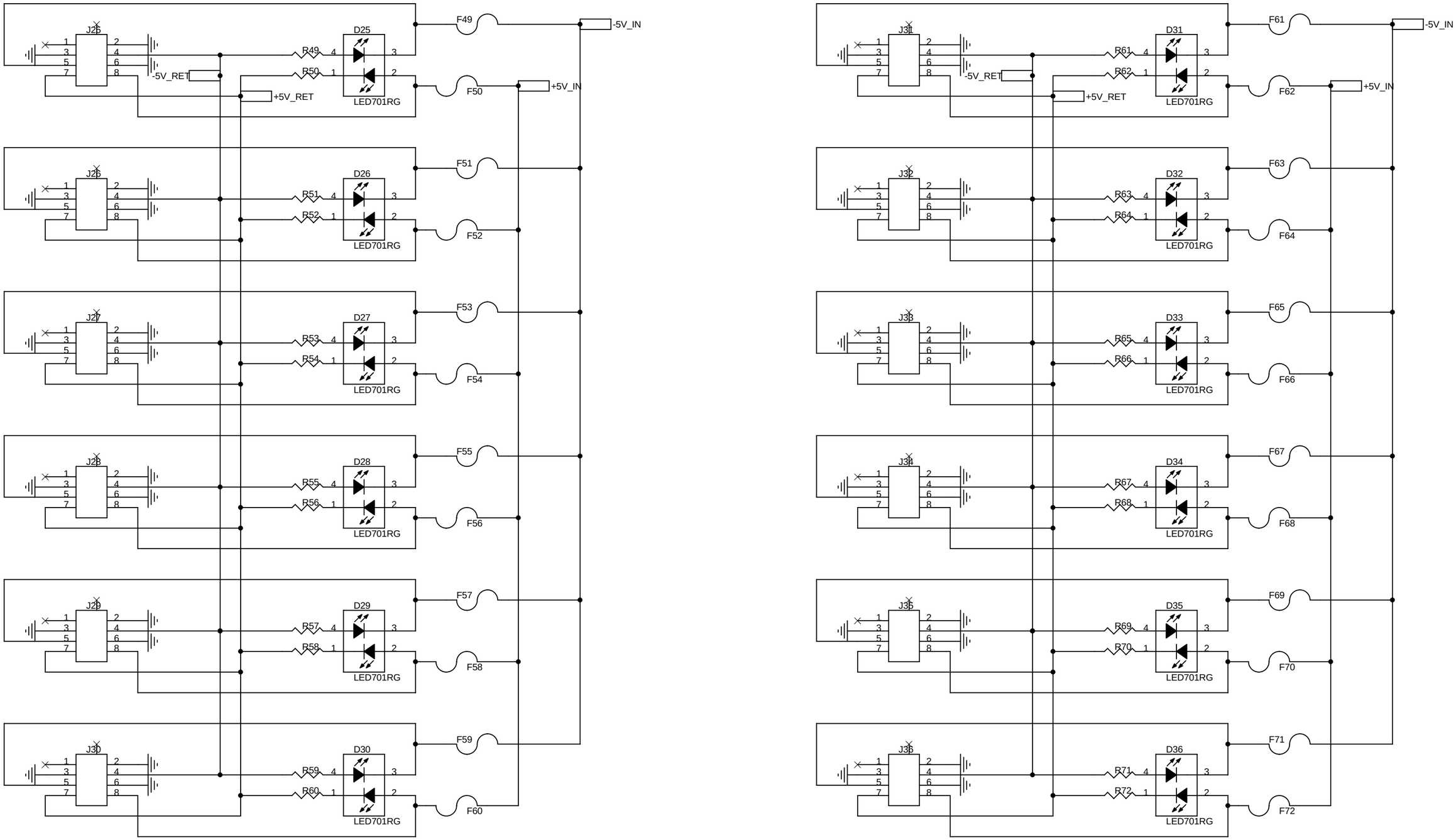

Title	MINOS Power Distribution Panel	
Size B	Document Number <Doc>	Rev ?
Date: Thursday, December 21, 2000	Sheet 3 of 3	

Top Assembly Layer

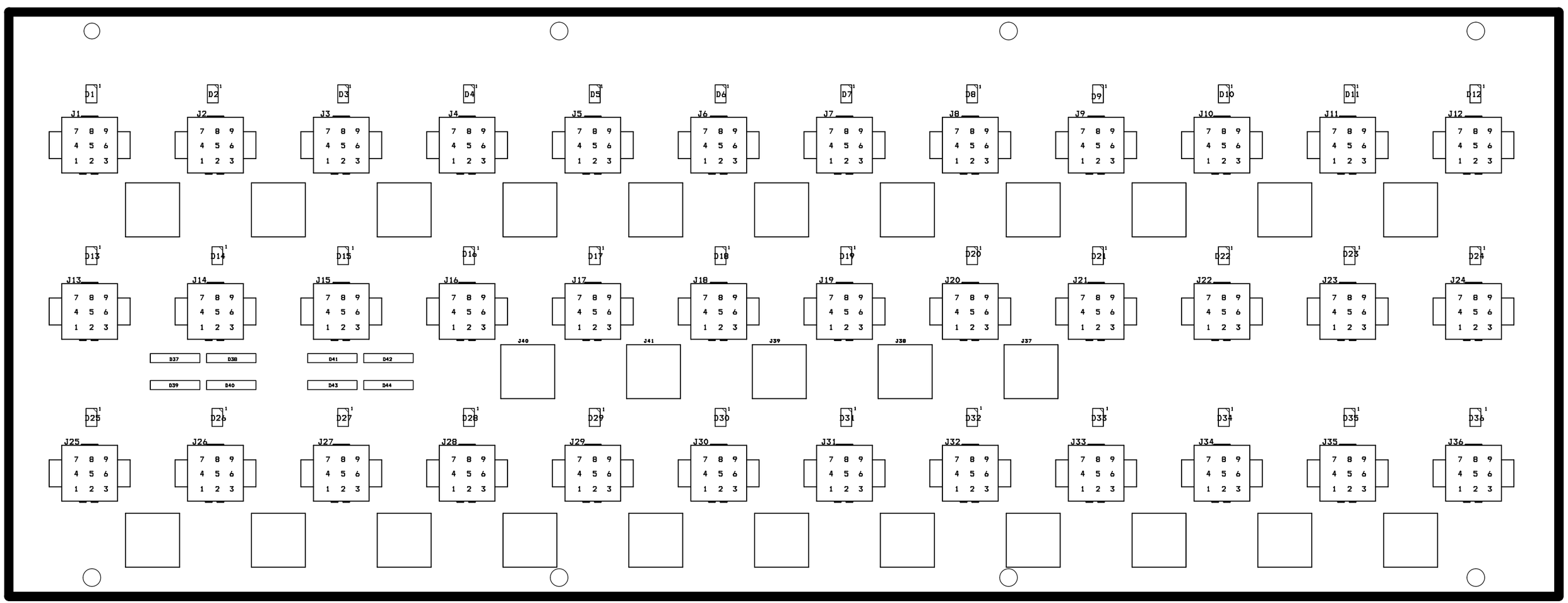

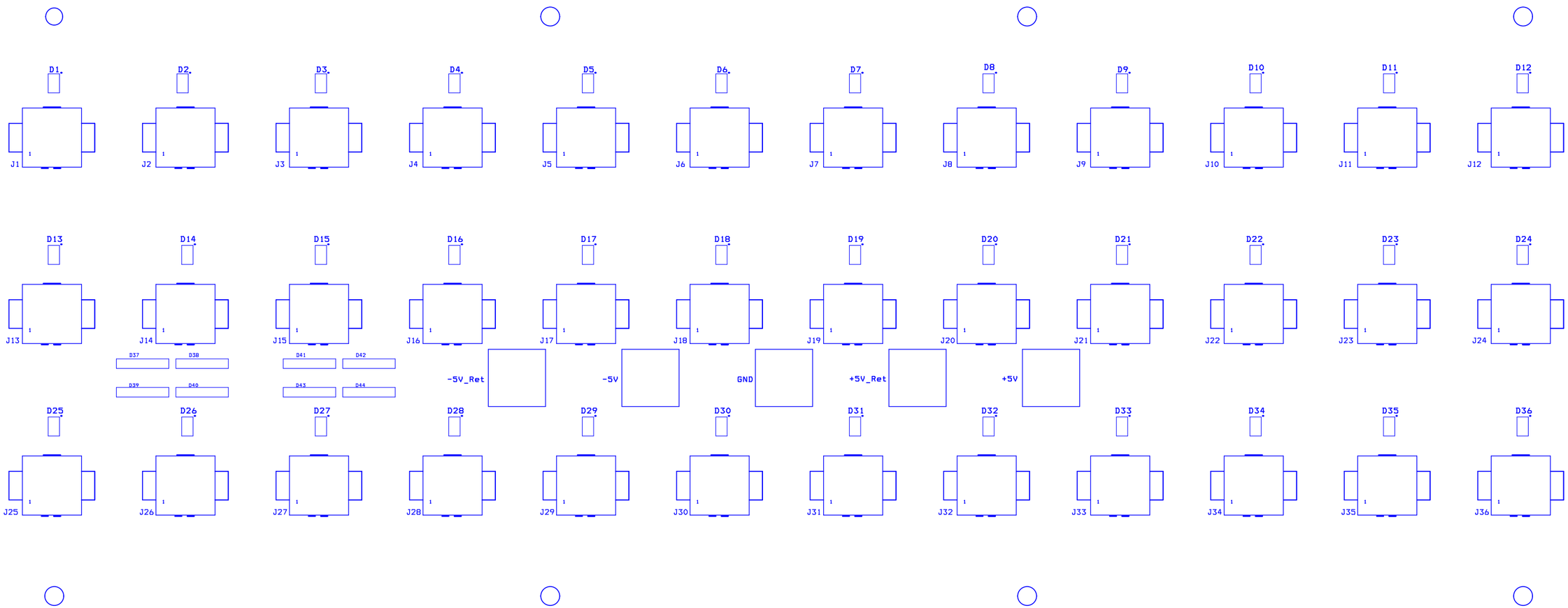
D1
D2
D3
D4
D5
D6
D7
D8
D9
D10
D11
D12
J1
J2
J3
J4
J5
J6
J7
J8
J9
J10
J11
J12
D13
D14
D15
D16
D17
D18
D19
D20
D21
D22
D23
D24
J13
J14
J15
J16
J17
J18
J19
J20
J21
J22
J23
J24
D37
D38
D39
D40
D41
D42
D43
D44
-5V_Ret
-5V
GND
+5V_Ret
+5V
D25
D26
D27
D28
D29
D30
D31
D32
D33
D34
D35
D36
J25
J26
J27
J28
J29
J30
J31
J32
J33
J34
J35
J36

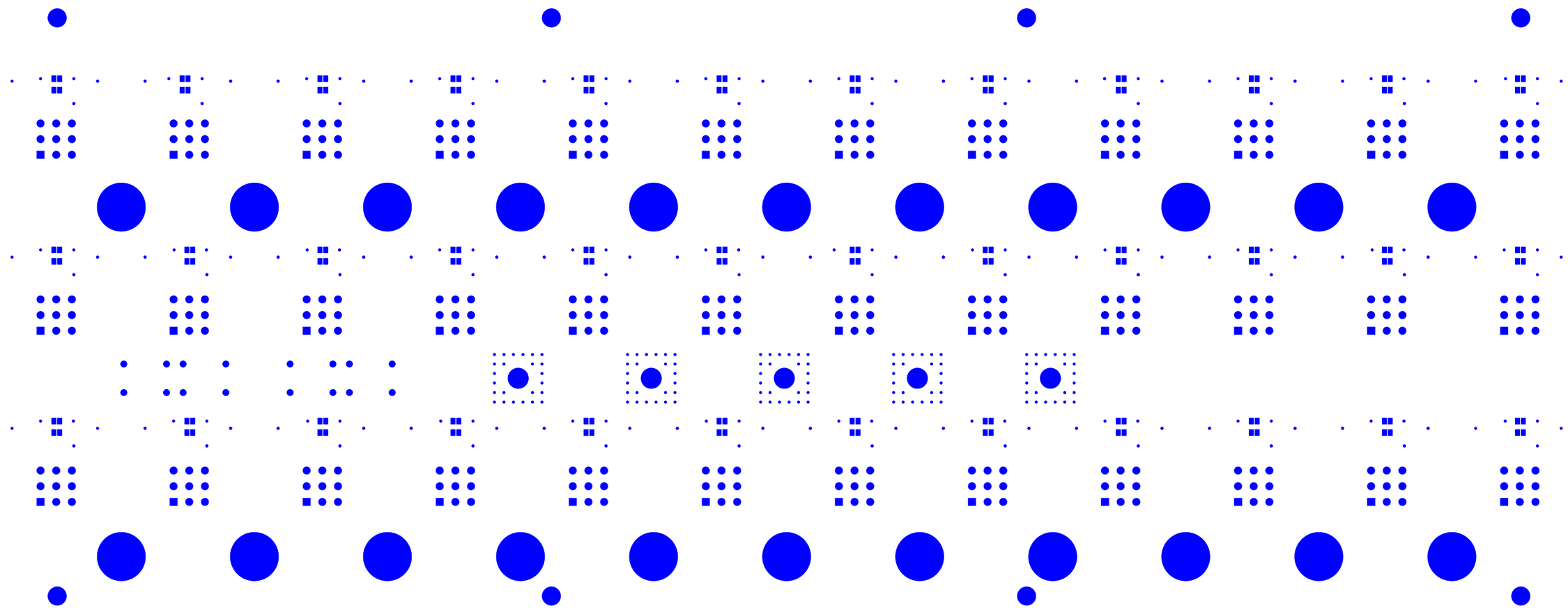

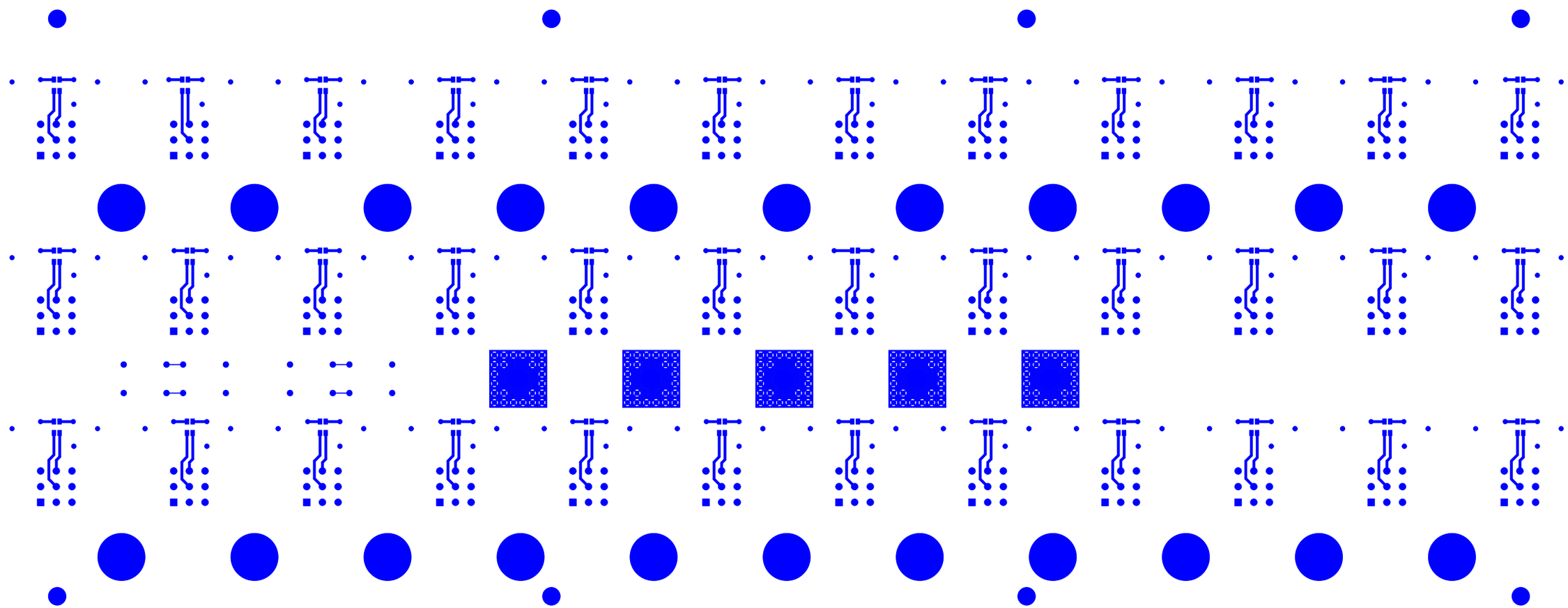

Layer1 TOP

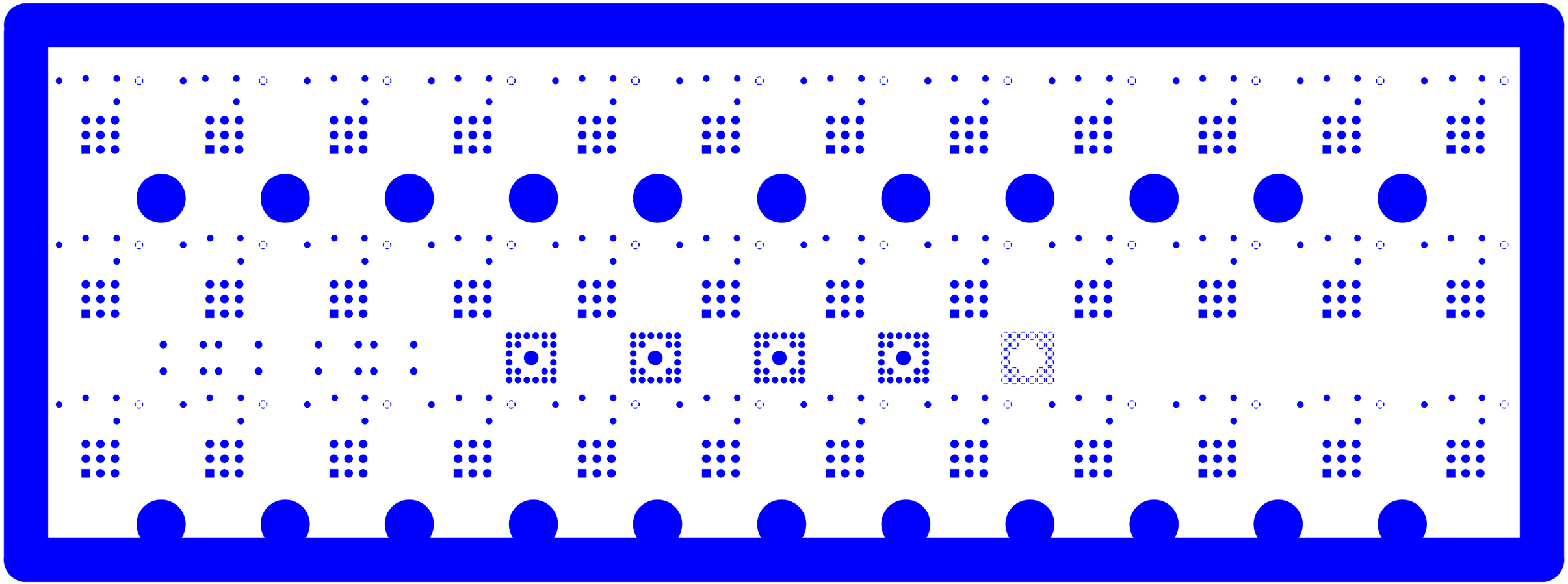

Layer2 IN1

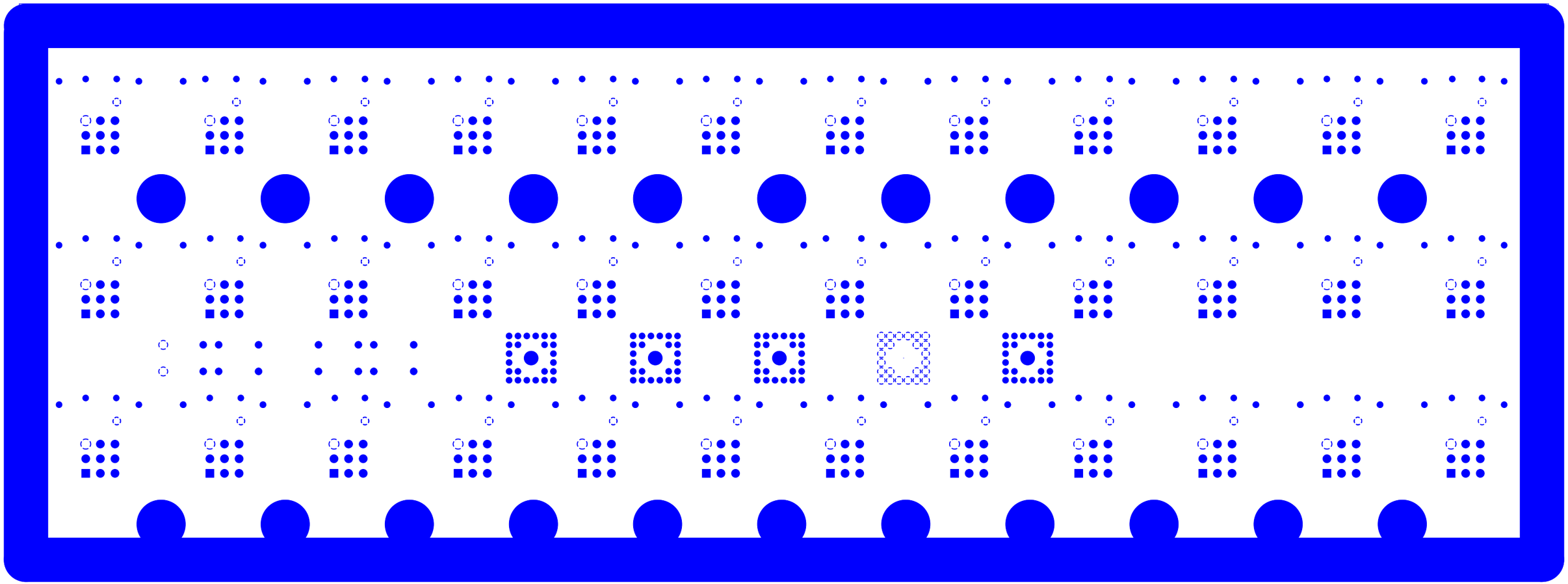

Layer3 IN2

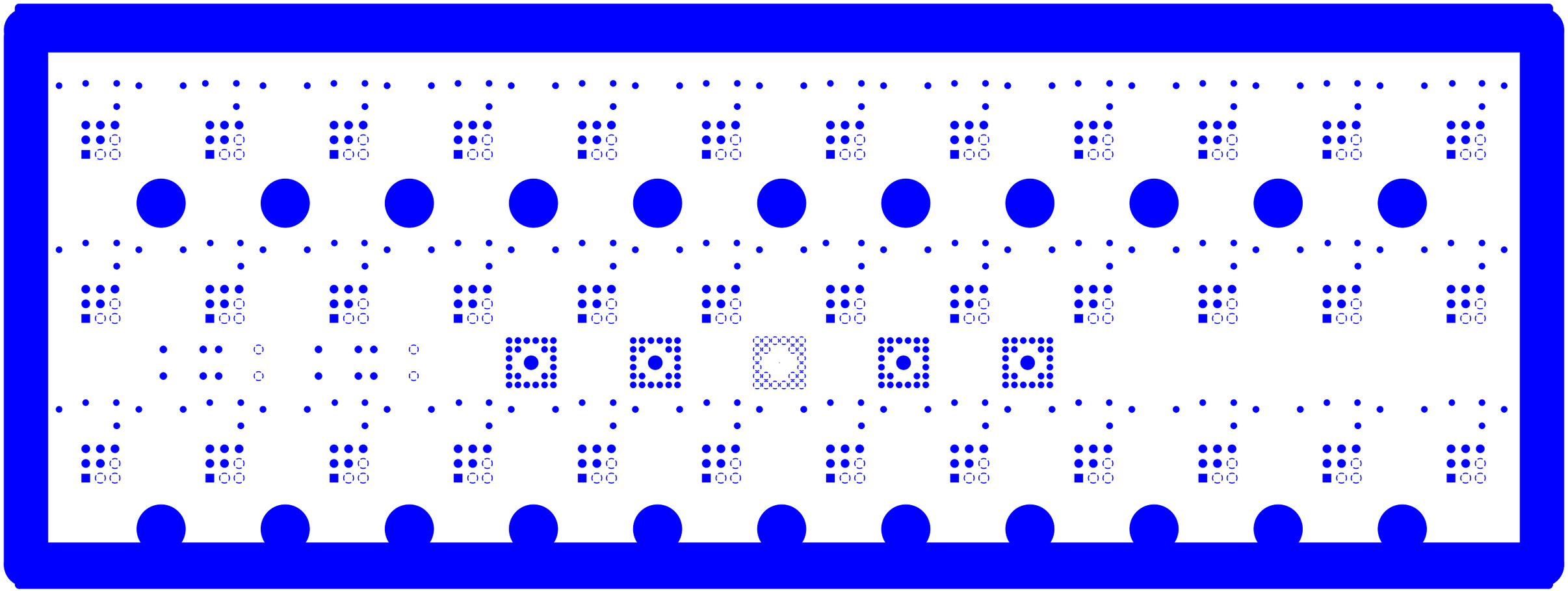

Layer4 GND

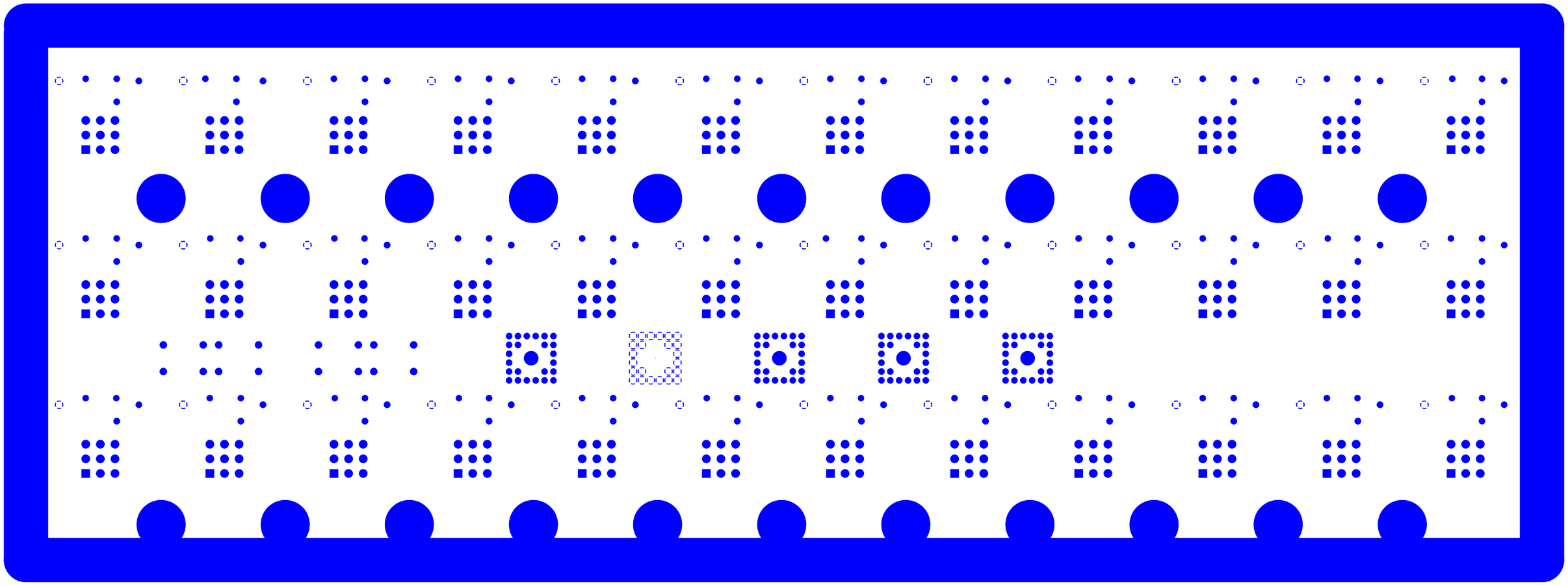

Layer5 IN3

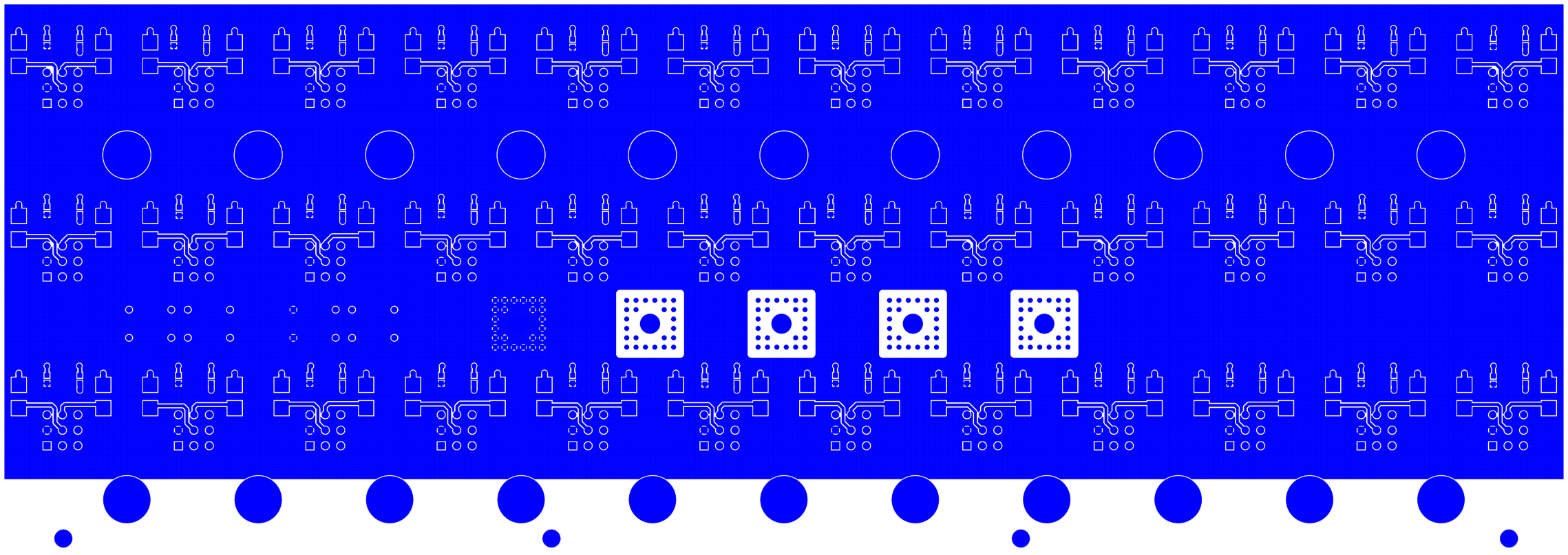

Layer6 BOT

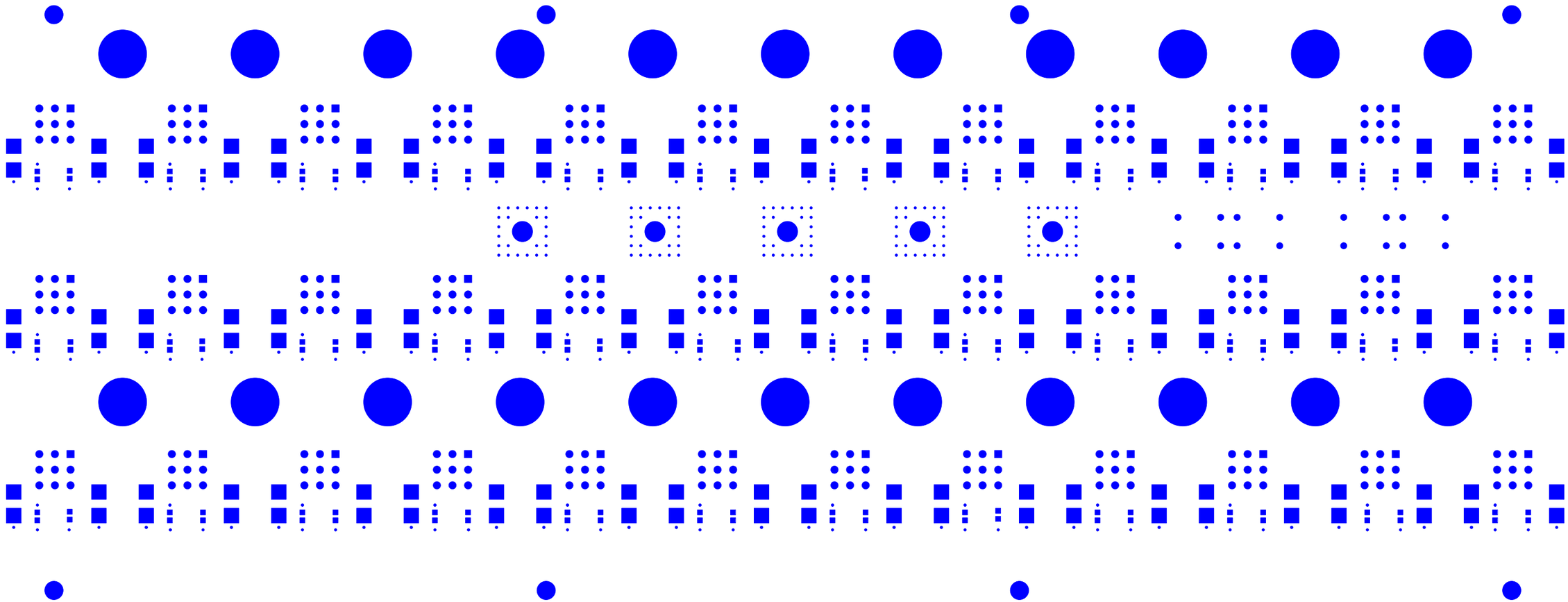

MINOS Far Detector Electronics
Power Distribution Panel Rev 2
January 17, 2001 S/N

+5V
+5V_Ret
GND
-5V
-5V_Ret

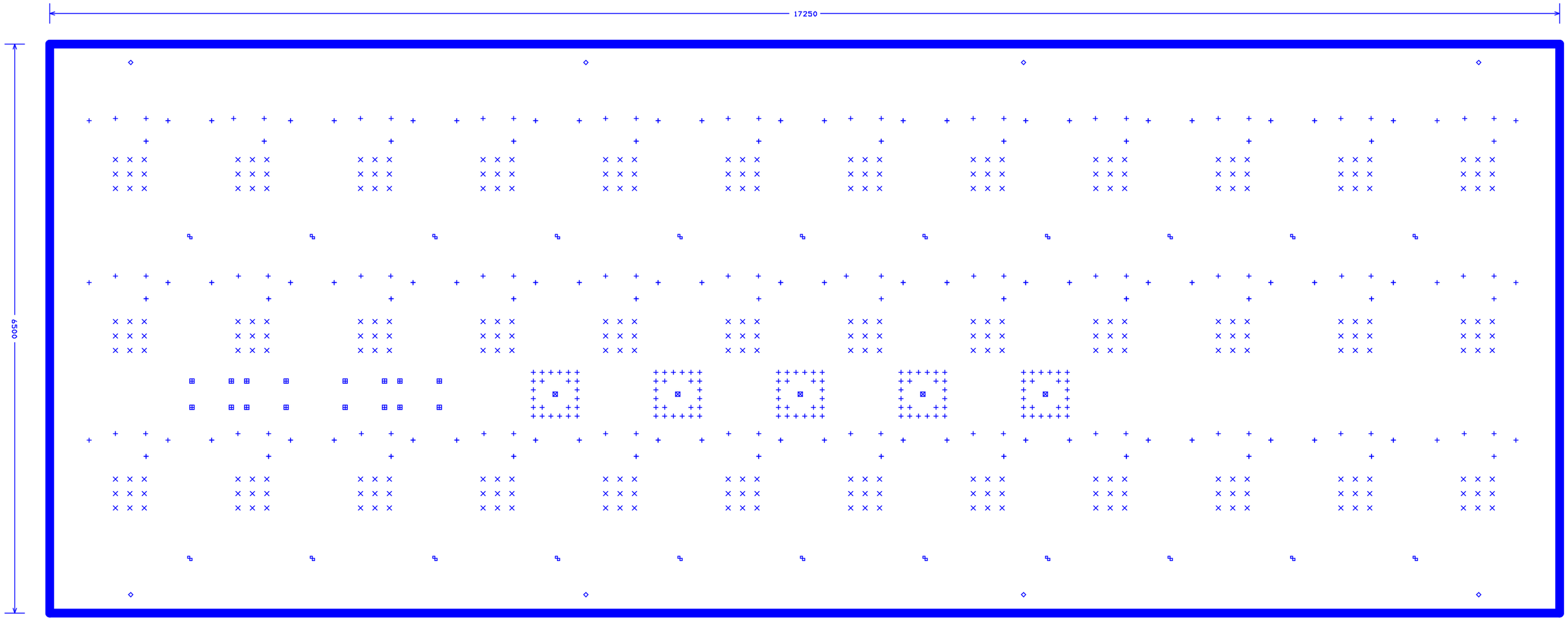

DRILL CHART				
SYM	DIAM	TOL	QTY	NOTE
+	0.028		300	vias
⊞	0.042		16	
×	0.055		324	9-pin connectors
⊠	0.110		5	12 awg power input
◇	0.170		8	mounting holes
⌂	0.500		22	NON-PLATED
TOTAL			675	

Top Assembly Layer

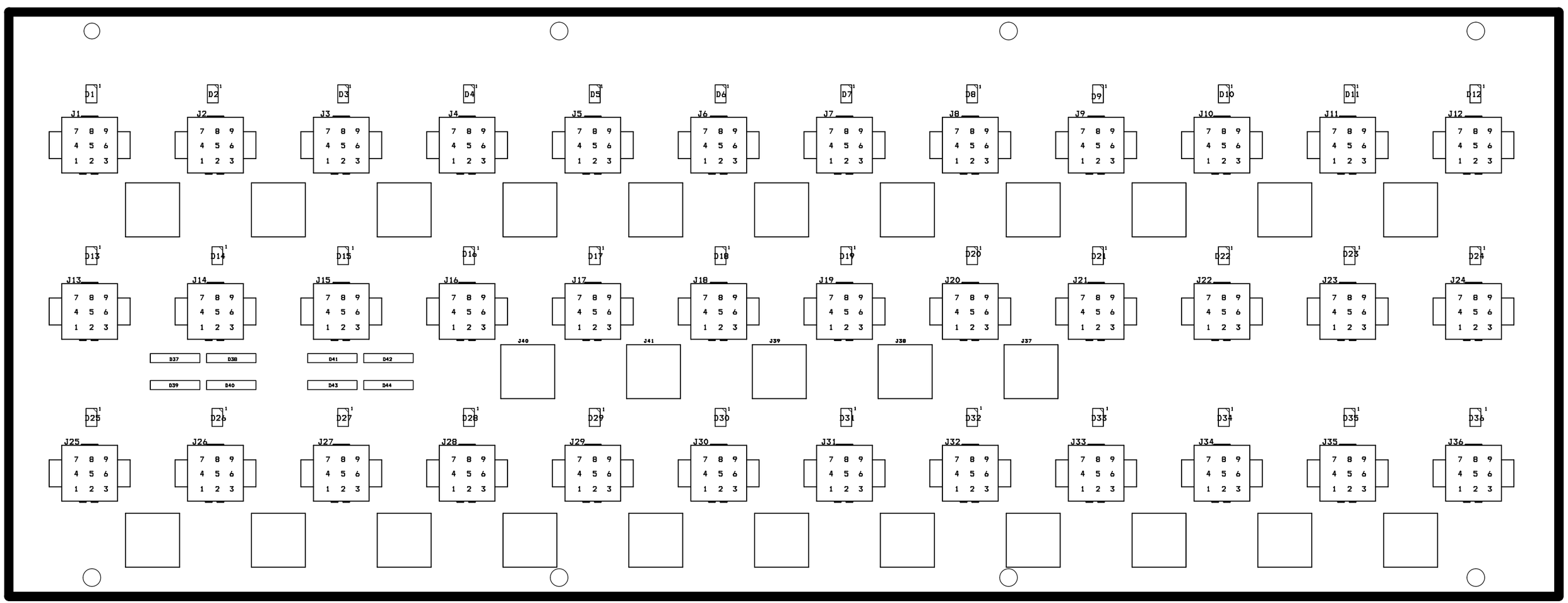

Bottom Assembly Layer

REVISIONS				
ZONE	REV	DESCRIPTION	DATE	APPROVED

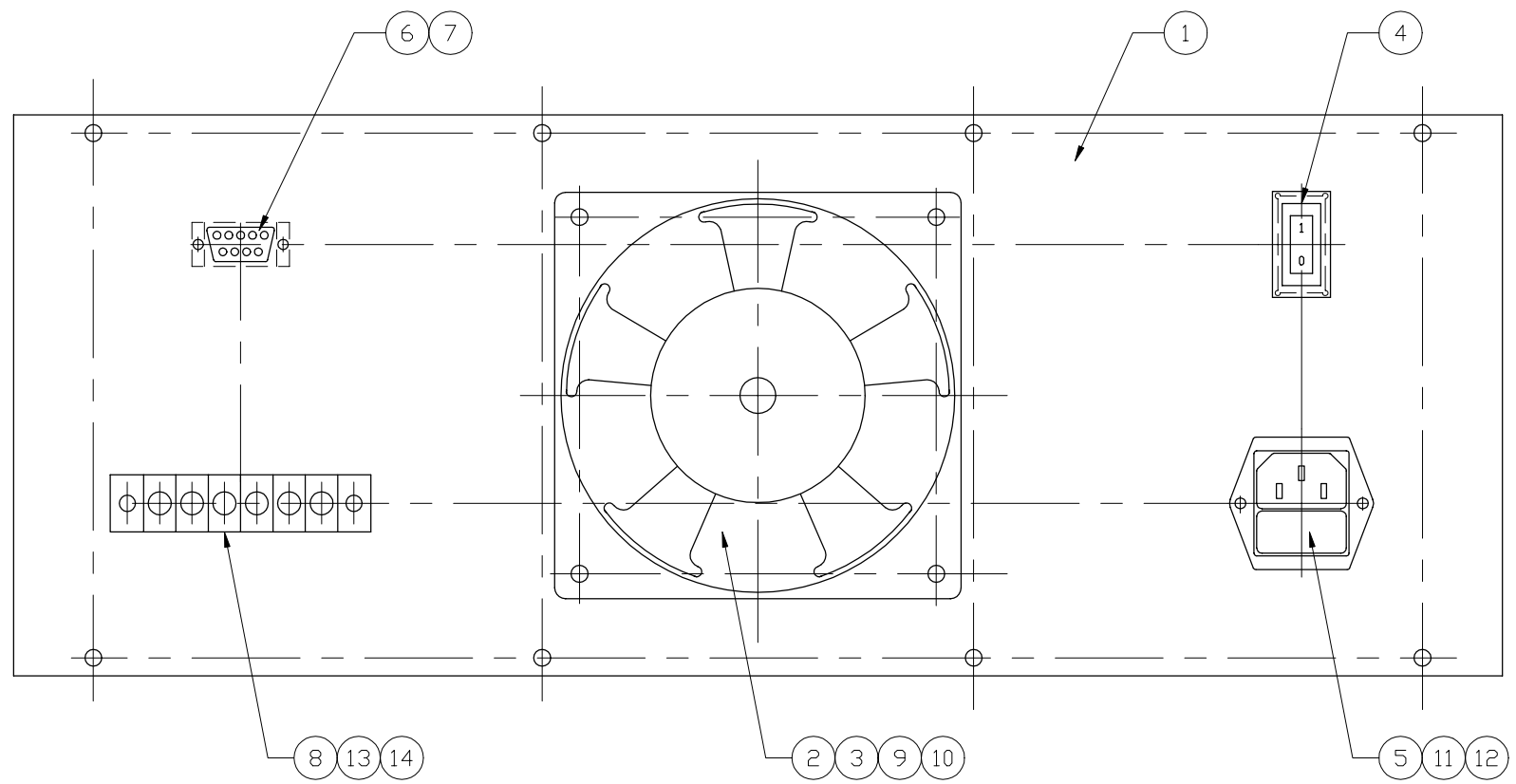

FIND/REF.#	QTY.	U.M.	PART NAME	MATERIAL	PART DESCRIPTION	REF. SHEET/DWG.
14	2	EA	NUT		6-32 HEX NUT P/N 91841A007 FROM "McMACTER"	
13	2	EA	SCREW		6-32CREW P/N 91810A151 FROM "McMASTER"	
12	2	EA	NUT		M3 HEX NUT P/N 91828A211 FROM "McMASTER"	
11	2	EA	SCREW		M3 FH SCREW P/N 92010A122 FROM "McMASTER"	
10	4	EA	NUT		M4 HEX NUT P/N 91828A231 FROM "McMASTER"	
9	4	EA	SCREW		M4 HEX SCREW P/N 91287A57 FROM "McMASTER"	
8	1	EA	JONES STRIP		6TERM JONES STRIP. P/N 14F2021 FROM "NEWARK"	
7	1	EA	SCREW ASSY		JACKSCREW ASSY. P/N MDVS22-ND FROM DIGI-KEY	
6	1	EA	CONNR.		9 PIN SOCKET CONNR. F. P/N A14057-ND FROM DIGI-KEY	
5	1	EA	AC SOCKET		AC SOCKET W/FUSE P/N 5091110 FROM "ALIED ELECT"	
4	1	EA	CW SWITCH		P/N SW354-ND FROM "DIGI-KEY"	
3	1	EA	FAN COVER		P/N GRM12045 FROM "CARLTON-BATES"	
2	1	EA	FAN		P/N DA109AP-11-1 TB FROM "CARLTON BATES"	
1	1	EA	BACK PNL	AL6061	.125 x 6.5 x 17.25 MACHINED	BACK PNL

PARTS LIST

UNLESS OTHERWISE SPECIFIED:

1. DIMENSIONS ARE IN INCHES.
2. MACHINE SURFACES TO BE FLAT, SQUARE, PARALLEL & CONCENTRIC WITHIN .001 FOR 5 INCHES OR .001 TIR AS APPLICABLE.
3. MARK ALL DETAILS (EXEMPT COMMERCIAL PARTS) WITH DWG. & ITEM NUMBER.
4. BREAK ALL SHARP CORNERS .01 x 45° CHAMFER.
5. FILLETS SHOWN SHARP = .04 RAD.
6. TAPPED HOLES: UNIFIED CLASS 2B THREAD., MIN DEPTH 1.5 x DIA.,
7. C'SINK BORED & REAMED HOLES 1/16 x 45°.
8. CENTERS PERMISSIBLE.
9. DO NOT SCALE DRAWING.
10. ALL WELDING TO CONFORM TO LATEST A.W.S. STANDARDS

PERMISSIBLE VARIATION IN INCH DIMENSIONS WITHOUT TOLERANCES

FABRICATION TOLERANCES		MACHINING TOLERANCES			
BELOW 12	±0.10	DECIMAL PLACES	X & X.X	X.XX	X.XXX
12 TO 60	±0.13	BELOW 18	±0.015	±0.010	±0.005
60 TO 180	±0.20	18 TO 48	±0.030	±0.020	±0.010
OVER 180	±0.30	OVER 48	±0.045	±0.030	±0.015
ANGLE TOLERANCE ±0.5°		ANGLE TOLERANCE ±0.1°			

SURFACE TEXTURE 125

TOLERANCES ARE NOT ACCUMULATIVE

NEXT ASSY	QTY	DRAWING INFORMATION	NAME	DATE
		DRAWN	ED K	4.3.01
		CHECKED		
		APPROVED	JNO	4.3.01

HIGH ENERGY PHYSICS LABORATORY

M I N O S
HARVARD UNIVERSITY

TITLE
MINOS
PDP
BACK PANEL ASSY

SIZE D | SCALE 1/1

PROJECT NUMBER: MINOS

DRAWING NUMBER: BACK PANEL ASSY

SHEET: 1 OF 1 | REVISION: A

REVISIONS				
ZONE	REV	DESCRIPTION	DATE	APPROVED
B3	B	DIM 1.220 CH TO 1.250	4.4.01	ED K
B5	B	DIM ø.266 CH TO ø.272	4.4.01	ED K

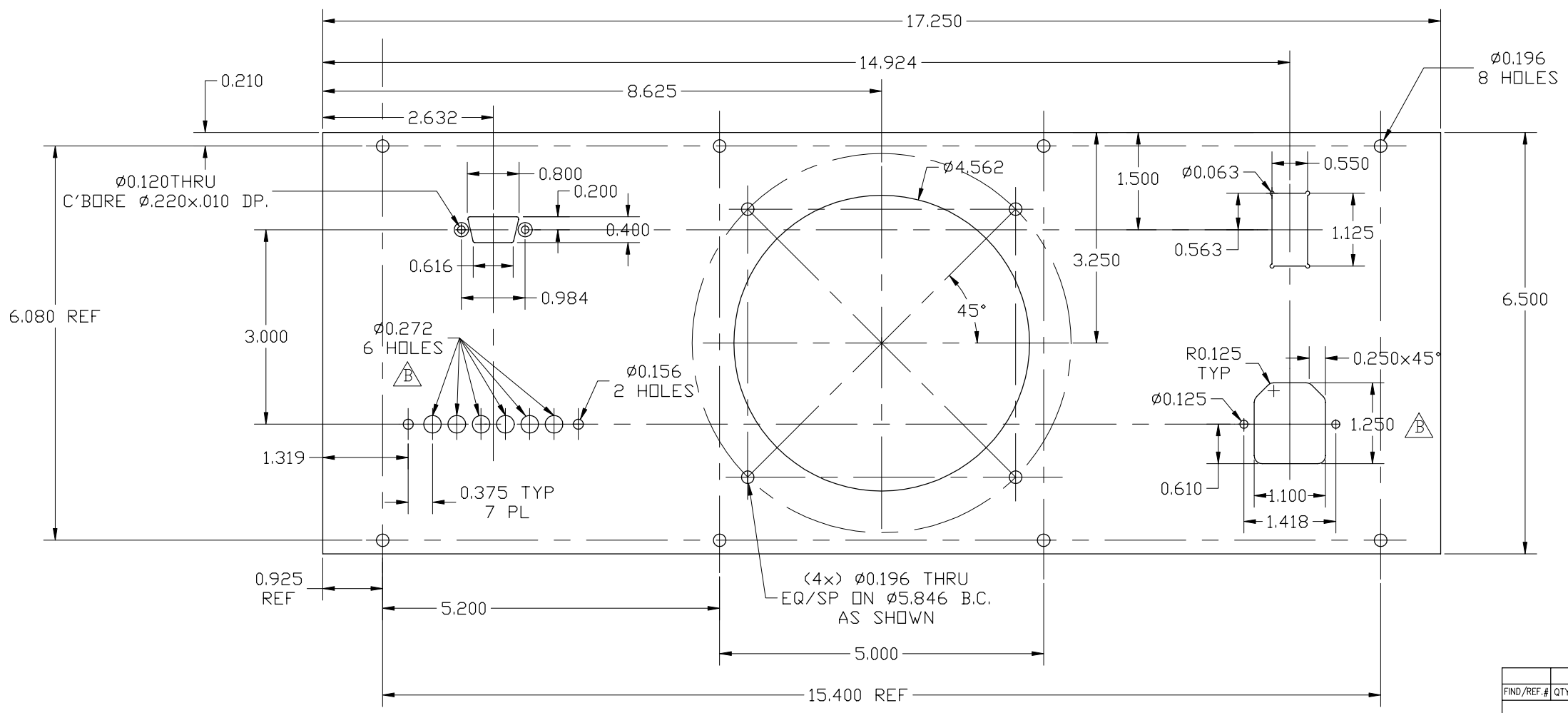

FIND/REF.#	QTY.	U.M.	PART NAME	MATERIAL	PART DESCRIPTION	REF. SHEET/DWG.
		EA	BACK PNL	AL6061	.125 x 6.5 x 17.25 MACHINED	

PARTS LIST

UNLESS OTHERWISE SPECIFIED:

1. DIMENSIONS ARE IN INCHES.
2. MACHINE SURFACES TO BE FLAT, SQUARE, PARALLEL & CONCENTRIC WITHIN .001 FOR 5 INCHES OR .001 TIR AS APPLICABLE.
3. MARK ALL DETAILS (EXEMPT COMMERCIAL PARTS) WITH DWG. & ITEM NUMBER.
4. BREAK ALL SHARP CORNERS .01 x 45° CHAMFER.
5. FILLETS SHOWN SHARP = .04 RAD.
6. TAPPED HOLES: UNIFIED CLASS 2B THREAD., MIN DEPTH 1.5 x DIA.,
7. C'SINK BORED & REAMED HOLES 1/16 x 45°.
8. CENTERS PERMISSIBLE.
9. DO NOT SCALE DRAWING.
10. ALL WELDING TO CONFORM TO LATEST A.W.S. STANDARDS

PERMISSIBLE VARIATION IN INCH DIMENSIONS WITHOUT TOLERANCES

FABRICATION TOLERANCES		MACHINING TOLERANCES			
BELOW 12	±0.10	DECIMAL PLACES	X & X.X	X.XX	X.XXX
12 TO 60	±0.13	BELOW 18	±0.015	±0.010	±0.005
60 TO 180	±0.20	18 TO 48	±0.030	±0.020	±0.010
OVER 180	±0.30	OVER 48	±0.045	±0.030	±0.015
ANGLE TOLERANCE ±0.5°		ANGLE TOLERANCE ±0.1°			

SURFACE TEXTURE 125

TOLERANCES ARE NOT ACCUMULATIVE

NEXT ASSY	QTY	DRAWING INFORMATION	NAME	DATE
		DRAWN	ED K	4.3.01
		CHECKED		
		APPROVED	JNO	4.3.01

HIGH ENERGY PHYSICS LABORATORY

MINOS
HARVARD UNIVERSITY

TITLE
MINOS
PDP
back_panel

SIZE D | SCALE 1/1

PROJECT NUMBER: MINOS

DRAWING NUMBER: BACK PANEL

SHEET: 1 OF 1 | REVISION: B

REVISIONS				
ZONE	REV	DESCRIPTION	DATE	APPROVED

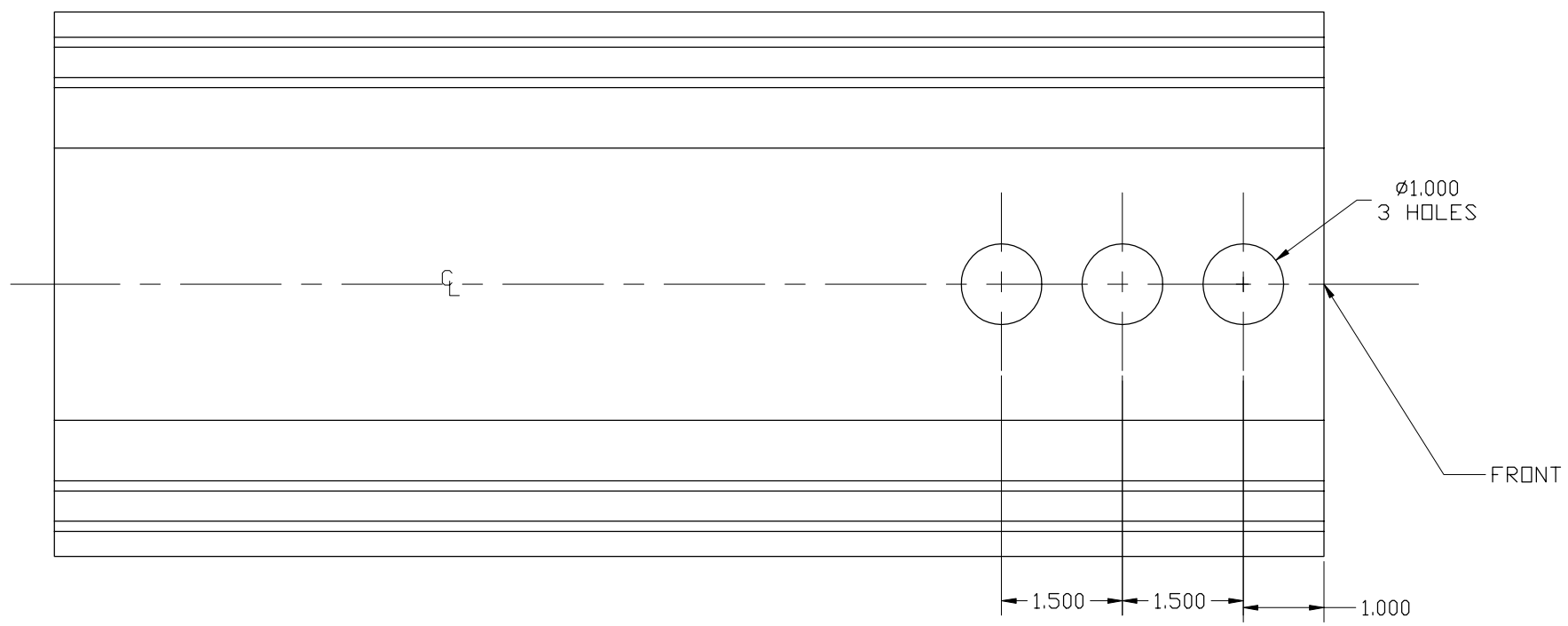

FIND/REF.#	QTY.	U.M.	PART NAME	MATERIAL	PART DESCRIPTION	REF. SHEET/DWG.

PARTS LIST

UNLESS OTHERWISE SPECIFIED:

1. DIMENSIONS ARE IN INCHES.
2. MACHINE SURFACES TO BE FLAT, SQUARE, PARALLEL & CONCENTRIC WITHIN .001 FOR 5 INCHES OR .001 TIR AS APPLICABLE.
3. MARK ALL DETAILS (EXEMPT COMMERCIAL PARTS) WITH DWG. & ITEM NUMBER.
4. BREAK ALL SHARP CORNERS .01 x 45° CHAMFER.
5. FILLETS SHOWN SHARP = .04 RAD.
6. TAPPED HOLES: UNIFIED CLASS 2B THREAD., MIN DEPTH 1.5 x DIA.,
7. C'SINK BORED & REAMED HOLES 1/16 x 45°.
8. CENTERS PERMISSIBLE.
9. DO NOT SCALE DRAWING.
10. ALL WELDING TO CONFORM TO LATEST A.W.S. STANDARDS

PERMISSIBLE VARIATION IN INCH DIMENSIONS WITHOUT TOLERANCES

FABRICATION TOLERANCES		MACHINING TOLERANCES			
BELOW 12	±0.10	DECIMAL PLACES	X & X.X	X.XX	X.XXX
12 TO 60	±0.13	BELOW 18	±0.015	±0.010	±0.005
60 TO 180	±0.20	18 TO 48	±0.030	±0.020	±0.010
OVER 180	±0.30	OVER 48	±0.045	±0.030	±0.015
ANGLE TOLERANCE ±0.5°		ANGLE TOLERANCE ±0.1°			

SURFACE TEXTURE 125

TOLERANCES ARE NOT ACCUMULATIVE

NEXT ASSY	QTY	DRAWING INFORMATION	NAME	DATE
		DRAWN	ED K	
		CHECKED		
		APPROVED		

HIGH ENERGY PHYSICS LABORATORY

M I N O S

HARVARD UNIVERSITY

TITLE
MINOS
PDP
SIDE_panel

SIZE: D
SCALE: 1/1
PROJECT NUMBER: MINOS
DRAWING NUMBER: SIDE PANEL
SHEET: 1 OF 1
REVISION: A

REVISIONS				
ZONE	REV	DESCRIPTION	DATE	APPROVED

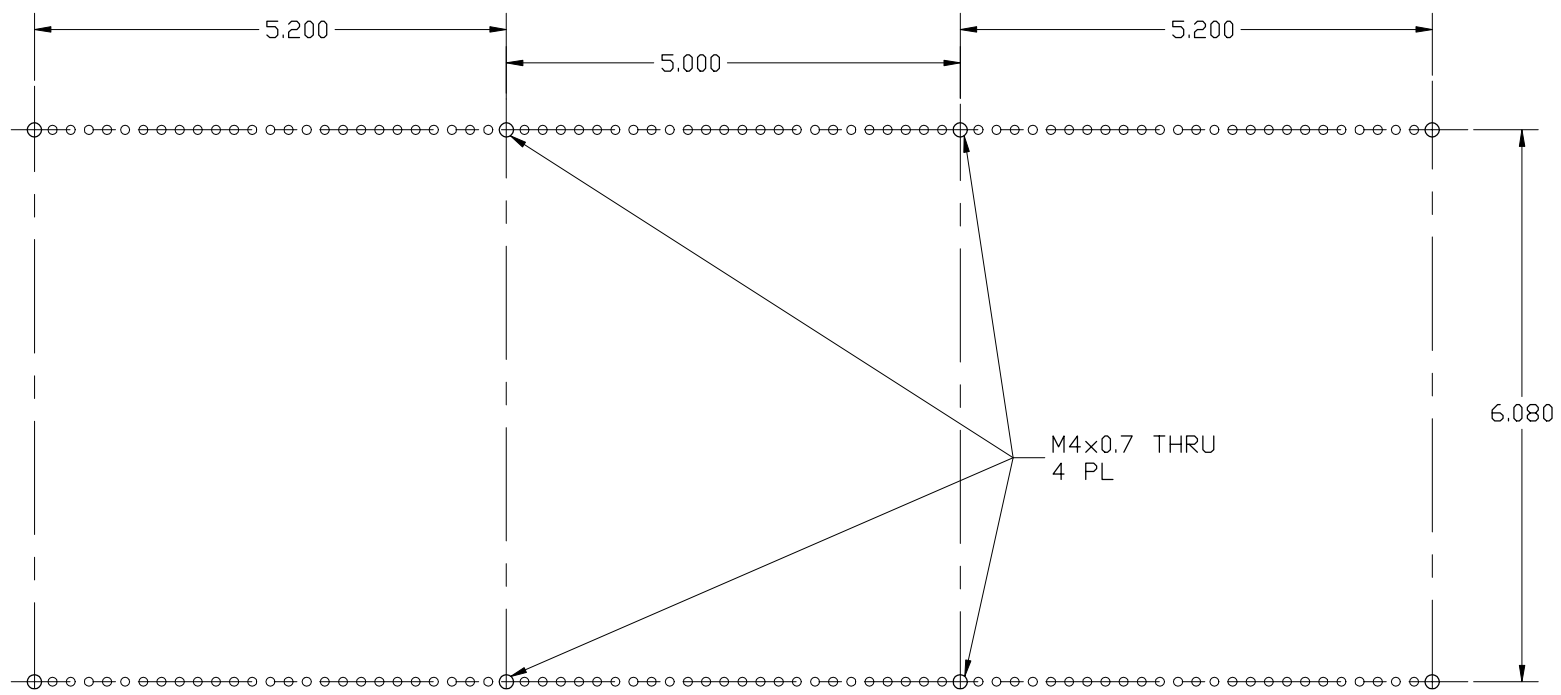

DRILL AND TAP FOUR M4 HOLES.
LOCATION BASED ON EXISTING DIMPLES.

FIND/REF.#	QTY.	U.M.	PART NAME	MATERIAL	PART DESCRIPTION	REF. SHEET/DWG.
	2	EA	BAR	AL6061	1.0 x 0.5 x .125 RECT. TUBING. MACHINED	

PARTS LIST

UNLESS OTHERWISE SPECIFIED:

1. DIMENSIONS ARE IN INCHES.
2. MACHINE SURFACES TO BE FLAT, SQUARE, PARALLEL & CONCENTRIC WITHIN .001 FOR 5 INCHES OR .001 TIR AS APPLICABLE.
3. MARK ALL DETAILS (EXEMPT COMMERCIAL PARTS) WITH DWG. & ITEM NUMBER.
4. BREAK ALL SHARP CORNERS .01 x 45° CHAMFER.
5. FILLETS SHOWN SHARP = .04 RAD.
6. TAPPED HOLES: UNIFIED CLASS 2B THREAD., MIN DEPTH 1.5 x DIA.,
7. C'SINK BORED & REAMED HOLES 1/16 x 45°.
8. CENTERS PERMISSIBLE.
9. DO NOT SCALE DRAWING.
10. ALL WELDING TO CONFORM TO LATEST A.W.S. STANDARDS

PERMISSIBLE VARIATION IN INCH DIMENSIONS WITHOUT TOLERANCES

FABRICATION TOLERANCES		MACHINING TOLERANCES			
BELOW 12	±0.10	DECIMAL PLACES	X & X.X	X.XX	X.XXX
12 TO 60	±0.13	BELOW 18	±0.015	±0.010	±0.005
60 TO 180	±0.20	18 TO 48	±0.030	±0.020	±0.010
OVER 180	±0.30	OVER 48	±0.045	±0.030	±0.015
ANGLE TOLERANCE ±0.5°		ANGLE TOLERANCE ±0.1°			

SURFACE TEXTURE 125

TOLERANCES ARE NOT ACCUMULATIVE

NEXT ASSY	QTY	DRAWING INFORMATION	NAME	DATE
		DRAWN	ED K	12.13.00
		CHECKED		
		APPROVED		

HIGH ENERGY PHYSICS LABORATORY

M I N O S
HARVARD UNIVERSITY

TITLE
MINOS
PDP
CB FRAME

SIZE *D* | SCALE 1/1
PROJECT NUMBER: MINOS
DRAWING NUMBER: M.HU.11.02
SHEET: 1 OF 1 | REVISION: A

REVISIONS				
ZONE	REV	DESCRIPTION	DATE	APPROVED

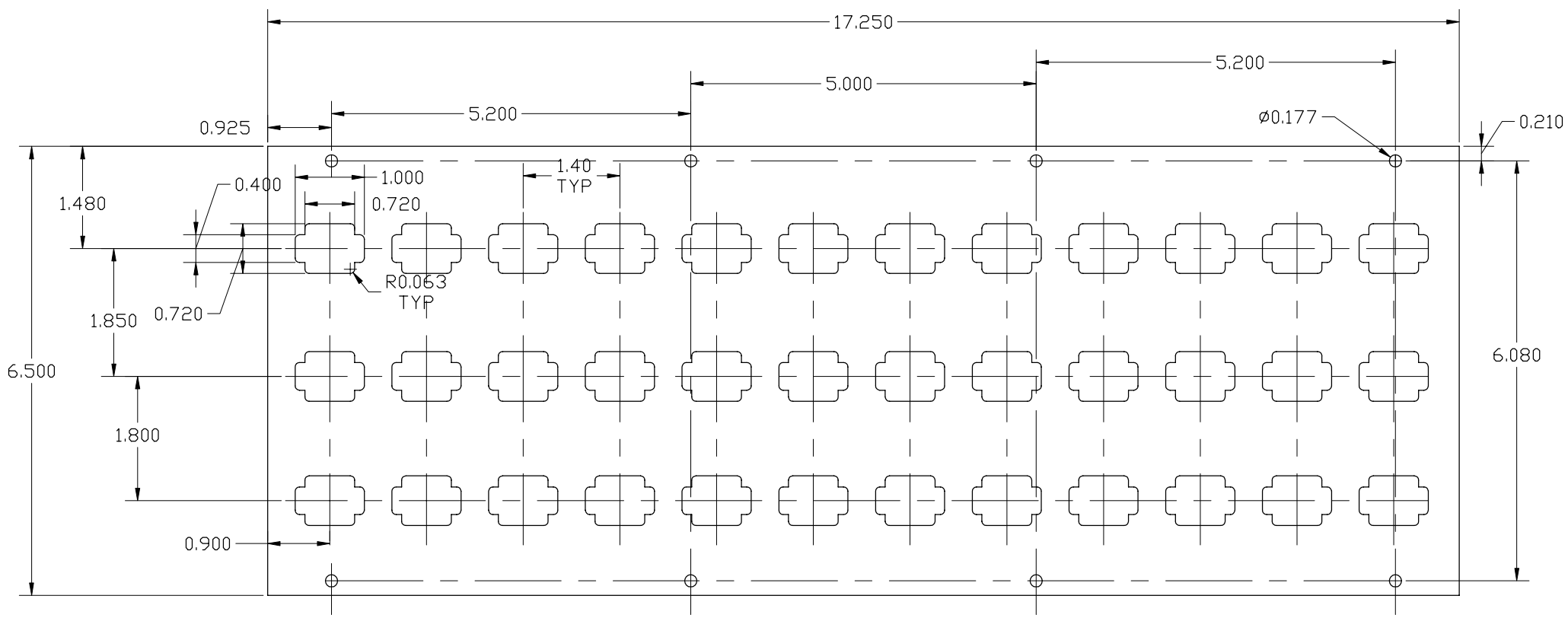

FIND/REF.#	QTY.	U.M.	PART NAME	MATERIAL	PART DESCRIPTION	REF. SHEET/DWG.
	1	EA	SCREEN	ACR. PLTC	1/8 THIK ACRILIC TRANSPARENT PLASTIC. MACHINED	

PARTS LIST

UNLESS OTHERWISE SPECIFIED:

1. DIMENSIONS ARE IN INCHES.
2. MACHINE SURFACES TO BE FLAT, SQUARE, PARALLEL & CONCENTRIC WITHIN .001 FOR 5 INCHES OR .001 TIR AS APPLICABLE.
3. MARK ALL DETAILS (EXEMPT COMMERCIAL PARTS) WITH DWG. & ITEM NUMBER.
4. BREAK ALL SHARP CORNERS .01 x 45° CHAMFER.
5. FILLETS SHOWN SHARP = .04 RAD.
6. TAPPED HOLES: UNIFIED CLASS 2B THREAD., MIN DEPTH 1.5 x DIA.,
7. C'SINK BORED & REAMED HOLES 1/16 x 45°.
8. CENTERS PERMISSIBLE.
9. DO NOT SCALE DRAWING.
10. ALL WELDING TO CONFORM TO LATEST A.W.S. STANDARDS

PERMISSIBLE VARIATION IN INCH DIMENSIONS WITHOUT TOLERANCES

FABRICATION TOLERANCES		MACHINING TOLERANCES			
BELOW 12	±0.10	DECIMAL PLACES	X & X.X	X.XX	X.XXX
12 TO 60	±0.13	BELOW 18	±0.015	±0.010	±0.005
60 TO 180	±0.20	18 TO 48	±0.030	±0.020	±0.010
OVER 180	±0.30	OVER 48	±0.045	±0.030	±0.015
ANGLE TOLERANCE ±0.5°		ANGLE TOLERANCE ±0.1°			

SURFACE TEXTURE 125

TOLERANCES ARE NOT ACCUMULATIVE

NEXT ASSY	QTY	DRAWING INFORMATION	NAME	DATE
		DRAWN	ED K	
		CHECKED		
		APPROVED		

HIGH ENERGY PHYSICS LABORATORY

M I N O S

HARVARD UNIVERSITY

TITLE
MINOS
PDP
SCREEN

SIZE: D
SCALE: 1/1
PROJECT NUMBER: MINOS
DRAWING NUMBER: M.HU.11.04
SHEET: 1 OF 1
REVISION: A

REVISIONS				
ZONE	REV	DESCRIPTION	DATE	APPROVED

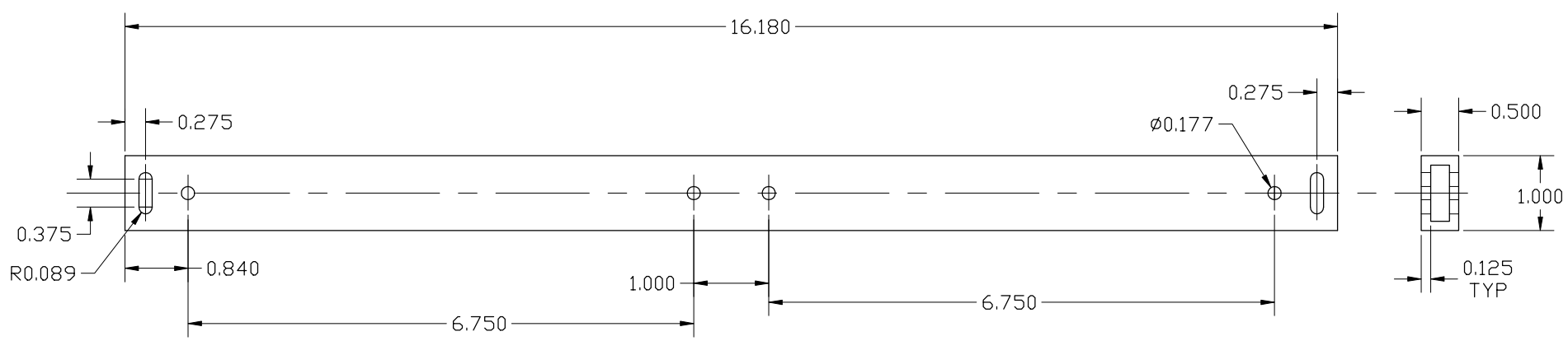

FIND/REF.#	QTY.	U.M.	PART NAME	MATERIAL	PART DESCRIPTION	REF. SHEET/DWG.
	2	EA	BAR	AL6061	1.0 x 0.5 x .125 RECT. TUBING. MACHINED	

PARTS LIST

UNLESS OTHERWISE SPECIFIED:

1. DIMENSIONS ARE IN INCHES.
2. MACHINE SURFACES TO BE FLAT, SQUARE, PARALLEL & CONCENTRIC WITHIN .001 FOR 5 INCHES OR .001 TIR AS APPLICABLE.
3. MARK ALL DETAILS (EXEMPT COMMERCIAL PARTS) WITH DWG. & ITEM NUMBER.
4. BREAK ALL SHARP CORNERS .01 x 45° CHAMFER.
5. FILLETS SHOWN SHARP = .04 RAD.
6. TAPPED HOLES: UNIFIED CLASS 2B THREAD., MIN DEPTH 1.5 x DIA.,
7. C'SINK BORED & REAMED HOLES 1/16 x 45°.
8. CENTERS PERMISSIBLE.
9. DO NOT SCALE DRAWING.
10. ALL WELDING TO CONFORM TO LATEST A.W.S. STANDARDS

PERMISSIBLE VARIATION IN INCH DIMENSIONS WITHOUT TOLERANCES

FABRICATION TOLERANCES		MACHINING TOLERANCES			
BELOW 12	±0.10	DECIMAL PLACES	X & X.X	X.XX	X.XXX
12 TO 60	±0.13	BELOW 18	±0.015	±0.010	±0.005
60 TO 180	±0.20	18 TO 48	±0.030	±0.020	±0.010
OVER 180	±0.30	OVER 48	±0.045	±0.030	±0.015
ANGLE TOLERANCE ±0.5°		ANGLE TOLERANCE ±0.1°			

SURFACE TEXTURE 125

TOLERANCES ARE NOT ACCUMULATIVE

NEXT ASSY	QTY	DRAWING INFORMATION	NAME	DATE
		DRAWN	ED K	12.12.00
		CHECKED		
		APPROVED		

HIGH ENERGY PHYSICS LABORATORY

M I N O S
HARVARD UNIVERSITY

TITLE
MINOS
PDP
PS SUPPORT

SIZE *D* | SCALE 1/1

PROJECT NUMBER: MINOS

DRAWING NUMBER: M.HU.11.01

SHEET 1 OF 1 | REVISION A

Last	**updated - 1/19/2001**			
RefDes	**ComponentName**	**Value**	**PartNumber**	**Manufacturer/**
				Vendor
Diodes				
D1	LED	Red/Green	537-7701-202	Dialight
D2	LED	Red/Green	537-7701-202	Dialight
D3	LED	Red/Green	537-7701-202	Dialight
D4	LED	Red/Green	537-7701-202	Dialight
D5	LED	Red/Green	537-7701-202	Dialight
D6	LED	Red/Green	537-7701-202	Dialight
D7	LED	Red/Green	537-7701-202	Dialight
D8	LED	Red/Green	537-7701-202	Dialight
D9	LED	Red/Green	537-7701-202	Dialight
D10	LED	Red/Green	537-7701-202	Dialight
D11	LED	Red/Green	537-7701-202	Dialight
D12	LED	Red/Green	537-7701-202	Dialight
D13	LED	Red/Green	537-7701-202	Dialight
D14	LED	Red/Green	537-7701-202	Dialight
D15	LED	Red/Green	537-7701-202	Dialight
D16	LED	Red/Green	537-7701-202	Dialight
D17	LED	Red/Green	537-7701-202	Dialight
D18	LED	Red/Green	537-7701-202	Dialight
D19	LED	Red/Green	537-7701-202	Dialight
D20	LED	Red/Green	537-7701-202	Dialight
D21	LED	Red/Green	537-7701-202	Dialight
D22	LED	Red/Green	537-7701-202	Dialight
D23	LED	Red/Green	537-7701-202	Dialight
D24	LED	Red/Green	537-7701-202	Dialight
D25	LED	Red/Green	537-7701-202	Dialight
D26	LED	Red/Green	537-7701-202	Dialight
D27	LED	Red/Green	537-7701-202	Dialight
D28	LED	Red/Green	537-7701-202	Dialight
D29	LED	Red/Green	537-7701-202	Dialight
D30	LED	Red/Green	537-7701-202	Dialight
D31	LED	Red/Green	537-7701-202	Dialight
D32	LED	Red/Green	537-7701-202	Dialight
D33	LED	Red/Green	537-7701-202	Dialight
D34	LED	Red/Green	537-7701-202	Dialight
D35	LED	Red/Green	537-7701-202	Dialight
D36	LED	Red/Green	537-7701-202	Dialight
D37	1N4002			
D38	1N4002			
D39	1N4002			
D40	1N4002			
D41	1N4002			
D42	1N4002			
D43	1N4002			
D44	1N4002			
Fuses				
F1	3/4 amp fuse in holder		F1221CT-ND	DigiKey

F2	3/4 amp fuse in holder		F1221CT-ND	DigiKey
F3	3/4 amp fuse in holder		F1221CT-ND	DigiKey
F4	3/4 amp fuse in holder		F1221CT-ND	DigiKey
F5	3/4 amp fuse in holder		F1221CT-ND	DigiKey
F6	3/4 amp fuse in holder		F1221CT-ND	DigiKey
F7	3/4 amp fuse in holder		F1221CT-ND	DigiKey
F8	3/4 amp fuse in holder		F1221CT-ND	DigiKey
F9	3/4 amp fuse in holder		F1221CT-ND	DigiKey
F10	3/4 amp fuse in holder		F1221CT-ND	DigiKey
F11	3/4 amp fuse in holder		F1221CT-ND	DigiKey
F12	3/4 amp fuse in holder		F1221CT-ND	DigiKey
F13	3/4 amp fuse in holder		F1221CT-ND	DigiKey
F14	3/4 amp fuse in holder		F1221CT-ND	DigiKey
F15	3/4 amp fuse in holder		F1221CT-ND	DigiKey
F16	3/4 amp fuse in holder		F1221CT-ND	DigiKey
F17	3/4 amp fuse in holder		F1221CT-ND	DigiKey
F18	3/4 amp fuse in holder		F1221CT-ND	DigiKey
F19	3/4 amp fuse in holder		F1221CT-ND	DigiKey
F20	3/4 amp fuse in holder		F1221CT-ND	DigiKey
F21	3/4 amp fuse in holder		F1221CT-ND	DigiKey
F22	3/4 amp fuse in holder		F1221CT-ND	DigiKey
F23	3/4 amp fuse in holder		F1221CT-ND	DigiKey
F24	3/4 amp fuse in holder		F1221CT-ND	DigiKey
F25	3/4 amp fuse in holder		F1221CT-ND	DigiKey
F26	3/4 amp fuse in holder		F1221CT-ND	DigiKey
F27	3/4 amp fuse in holder		F1221CT-ND	DigiKey
F28	3/4 amp fuse in holder		F1221CT-ND	DigiKey
F29	3/4 amp fuse in holder		F1221CT-ND	DigiKey
F30	3/4 amp fuse in holder		F1221CT-ND	DigiKey
F31	3/4 amp fuse in holder		F1221CT-ND	DigiKey
F32	3/4 amp fuse in holder		F1221CT-ND	DigiKey
F33	3/4 amp fuse in holder		F1221CT-ND	DigiKey
F34	3/4 amp fuse in holder		F1221CT-ND	DigiKey
F35	3/4 amp fuse in holder		F1221CT-ND	DigiKey
F36	3/4 amp fuse in holder		F1221CT-ND	DigiKey
F37	3/4 amp fuse in holder		F1221CT-ND	DigiKey
F38	3/4 amp fuse in holder		F1221CT-ND	DigiKey
F39	3/4 amp fuse in holder		F1221CT-ND	DigiKey
F40	3/4 amp fuse in holder		F1221CT-ND	DigiKey
F41	3/4 amp fuse in holder		F1221CT-ND	DigiKey
F42	3/4 amp fuse in holder		F1221CT-ND	DigiKey
F43	3/4 amp fuse in holder		F1221CT-ND	DigiKey
F44	3/4 amp fuse in holder		F1221CT-ND	DigiKey
F45	3/4 amp fuse in holder		F1221CT-ND	DigiKey
F46	3/4 amp fuse in holder		F1221CT-ND	DigiKey
F47	3/4 amp fuse in holder		F1221CT-ND	DigiKey
F48	3/4 amp fuse in holder		F1221CT-ND	DigiKey
F49	3/4 amp fuse in holder		F1221CT-ND	DigiKey
F50	3/4 amp fuse in holder		F1221CT-ND	DigiKey
F51	3/4 amp fuse in holder		F1221CT-ND	DigiKey
F52	3/4 amp fuse in holder		F1221CT-ND	DigiKey
F53	3/4 amp fuse in holder		F1221CT-ND	DigiKey

F54	3/4 amp fuse in holder		F1221CT-ND	DigiKey
F55	3/4 amp fuse in holder		F1221CT-ND	DigiKey
F56	3/4 amp fuse in holder		F1221CT-ND	DigiKey
F57	3/4 amp fuse in holder		F1221CT-ND	DigiKey
F58	3/4 amp fuse in holder		F1221CT-ND	DigiKey
F59	3/4 amp fuse in holder		F1221CT-ND	DigiKey
F60	3/4 amp fuse in holder		F1221CT-ND	DigiKey
F61	3/4 amp fuse in holder		F1221CT-ND	DigiKey
F62	3/4 amp fuse in holder		F1221CT-ND	DigiKey
F63	3/4 amp fuse in holder		F1221CT-ND	DigiKey
F64	3/4 amp fuse in holder		F1221CT-ND	DigiKey
F65	3/4 amp fuse in holder		F1221CT-ND	DigiKey
F66	3/4 amp fuse in holder		F1221CT-ND	DigiKey
F67	3/4 amp fuse in holder		F1221CT-ND	DigiKey
F68	3/4 amp fuse in holder		F1221CT-ND	DigiKey
F69	3/4 amp fuse in holder		F1221CT-ND	DigiKey
F70	3/4 amp fuse in holder		F1221CT-ND	DigiKey
F71	3/4 amp fuse in holder		F1221CT-ND	DigiKey
F72	3/4 amp fuse in holder		F1221CT-ND	DigiKey
Connectors				
J1	9 Pin PC mount header		A14209-ND	DigiKey
J2	9 Pin PC mount header		A14209-ND	DigiKey
J3	9 Pin PC mount header		A14209-ND	DigiKey
J4	9 Pin PC mount header		A14209-ND	DigiKey
J5	9 Pin PC mount header		A14209-ND	DigiKey
J6	9 Pin PC mount header		A14209-ND	DigiKey
J7	9 Pin PC mount header		A14209-ND	DigiKey
J8	9 Pin PC mount header		A14209-ND	DigiKey
J9	9 Pin PC mount header		A14209-ND	DigiKey
J10	9 Pin PC mount header		A14209-ND	DigiKey
J11	9 Pin PC mount header		A14209-ND	DigiKey
J12	9 Pin PC mount header		A14209-ND	DigiKey
J13	9 Pin PC mount header		A14209-ND	DigiKey
J14	9 Pin PC mount header		A14209-ND	DigiKey
J15	9 Pin PC mount header		A14209-ND	DigiKey
J16	9 Pin PC mount header		A14209-ND	DigiKey
J17	9 Pin PC mount header		A14209-ND	DigiKey
J18	9 Pin PC mount header		A14209-ND	DigiKey
J19	9 Pin PC mount header		A14209-ND	DigiKey
J20	9 Pin PC mount header		A14209-ND	DigiKey
J21	9 Pin PC mount header		A14209-ND	DigiKey
J22	9 Pin PC mount header		A14209-ND	DigiKey
J23	9 Pin PC mount header		A14209-ND	DigiKey
J24	9 Pin PC mount header		A14209-ND	DigiKey
J25	9 Pin PC mount header		A14209-ND	DigiKey
J26	9 Pin PC mount header		A14209-ND	DigiKey
J27	9 Pin PC mount header		A14209-ND	DigiKey
J28	9 Pin PC mount header		A14209-ND	DigiKey
J29	9 Pin PC mount header		A14209-ND	DigiKey
J30	9 Pin PC mount header		A14209-ND	DigiKey
J31	9 Pin PC mount header		A14209-ND	DigiKey
J32	9 Pin PC mount header		A14209-ND	DigiKey

J33	9 Pin PC mount header		A14209-ND	DigiKey
J34	9 Pin PC mount header		A14209-ND	DigiKey
J35	9 Pin PC mount header		A14209-ND	DigiKey
J36	9 Pin PC mount header		A14209-ND	DigiKey
Resistors				
R1	0805 resistor	300 ohm		
R2	0805 resistor	300 ohm		
R3	0805 resistor	300 ohm		
R4	0805 resistor	300 ohm		
R5	0805 resistor	300 ohm		
R6	0805 resistor	300 ohm		
R7	0805 resistor	300 ohm		
R8	0805 resistor	300 ohm		
R9	0805 resistor	300 ohm		
R10	0805 resistor	300 ohm		
R11	0805 resistor	300 ohm		
R12	0805 resistor	300 ohm		
R13	0805 resistor	300 ohm		
R14	0805 resistor	300 ohm		
R15	0805 resistor	300 ohm		
R16	0805 resistor	300 ohm		
R17	0805 resistor	300 ohm		
R18	0805 resistor	300 ohm		
R19	0805 resistor	300 ohm		
R20	0805 resistor	300 ohm		
R21	0805 resistor	300 ohm		
R22	0805 resistor	300 ohm		
R23	0805 resistor	300 ohm		
R24	0805 resistor	300 ohm		
R25	0805 resistor	300 ohm		
R26	0805 resistor	300 ohm		
R27	0805 resistor	300 ohm		
R28	0805 resistor	300 ohm		
R29	0805 resistor	300 ohm		
R30	0805 resistor	300 ohm		
R31	0805 resistor	300 ohm		
R32	0805 resistor	300 ohm		
R33	0805 resistor	300 ohm		
R34	0805 resistor	300 ohm		
R35	0805 resistor	300 ohm		
R36	0805 resistor	300 ohm		
R37	0805 resistor	300 ohm		
R38	0805 resistor	300 ohm		
R39	0805 resistor	300 ohm		
R40	0805 resistor	300 ohm		
R41	0805 resistor	300 ohm		
R42	0805 resistor	300 ohm		
R43	0805 resistor	300 ohm		
R44	0805 resistor	300 ohm		
R45	0805 resistor	300 ohm		
R46	0805 resistor	300 ohm		
R47	0805 resistor	300 ohm		

R48	0805 resistor	300 ohm		
R49	0805 resistor	300 ohm		
R50	0805 resistor	300 ohm		
R51	0805 resistor	300 ohm		
R52	0805 resistor	300 ohm		
R53	0805 resistor	300 ohm		
R54	0805 resistor	300 ohm		
R55	0805 resistor	300 ohm		
R56	0805 resistor	300 ohm		
R57	0805 resistor	300 ohm		
R58	0805 resistor	300 ohm		
R59	0805 resistor	300 ohm		
R60	0805 resistor	300 ohm		
R61	0805 resistor	300 ohm		
R62	0805 resistor	300 ohm		
R63	0805 resistor	300 ohm		
R64	0805 resistor	300 ohm		
R65	0805 resistor	300 ohm		
R66	0805 resistor	300 ohm		
R67	0805 resistor	300 ohm		
R68	0805 resistor	300 ohm		
R69	0805 resistor	300 ohm		
R70	0805 resistor	300 ohm		
R71	0805 resistor	300 ohm		
R72	0805 resistor	300 ohm		

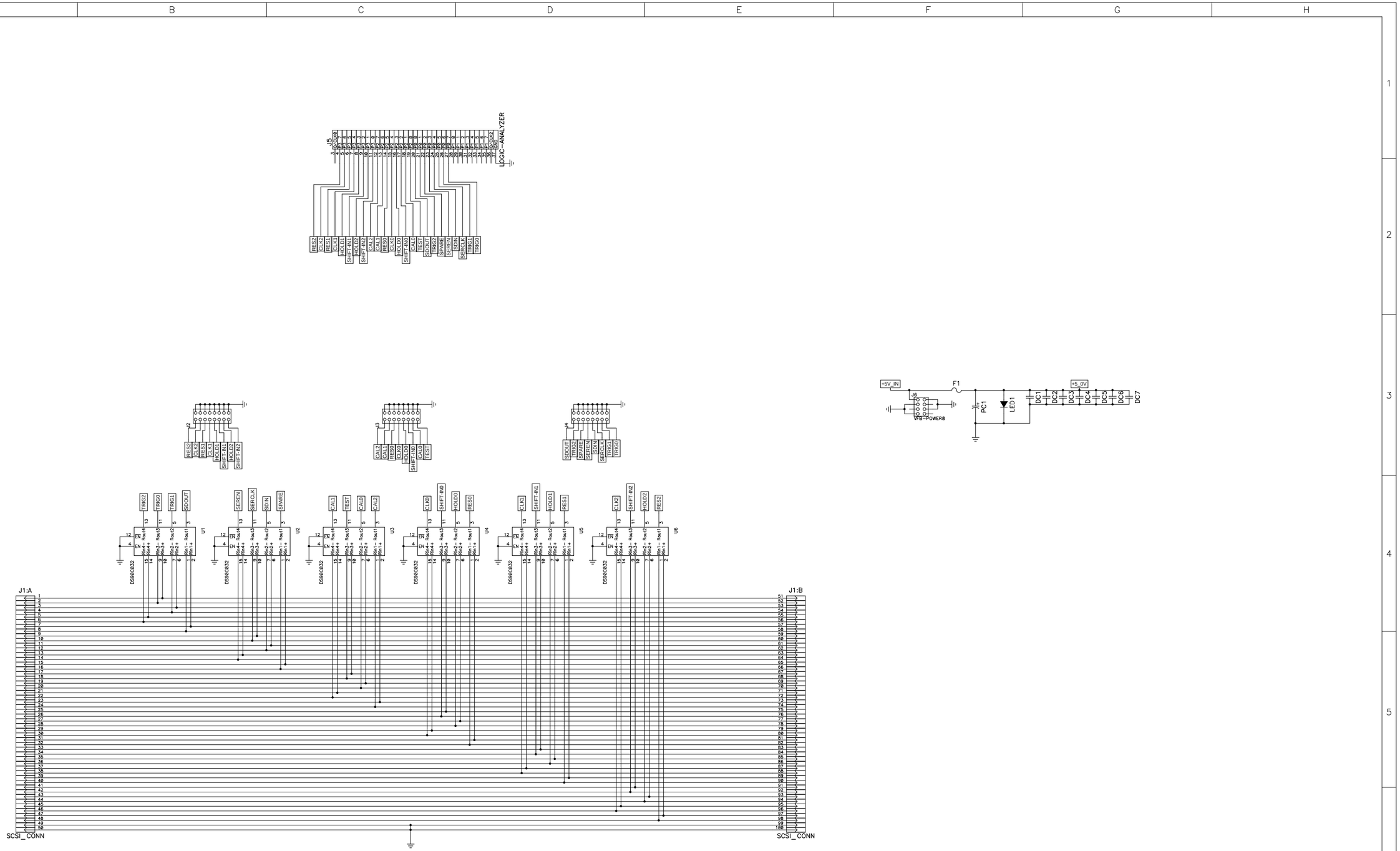

Title		
Size D	Number	Rev
Date	Drawn by	
Filename	Sheet of	

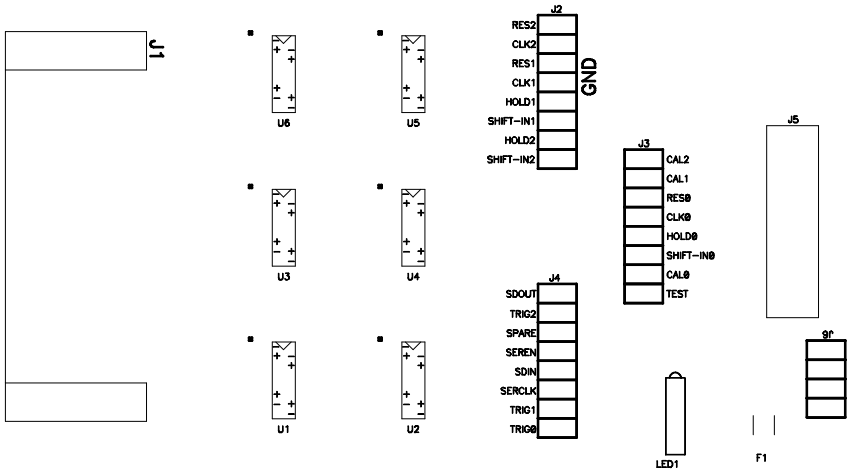
J1
U6
U5
U3
U4
U1
U2
J2
RES2
CLK2
RES1
CLK1
HOLD1
SHIFT-IN1
HOLD2
SHIFT-IN2
GND
J4
SDOUT
TRIG2
SPARE
SEREN
SDIN
SERCLK
TRIG1
TRIG0
J3
CAL2
CAL1
RES0
CLK0
HOLD0
SHIFT-IN0
CAL0
TEST
J5
9V
LED1
F1

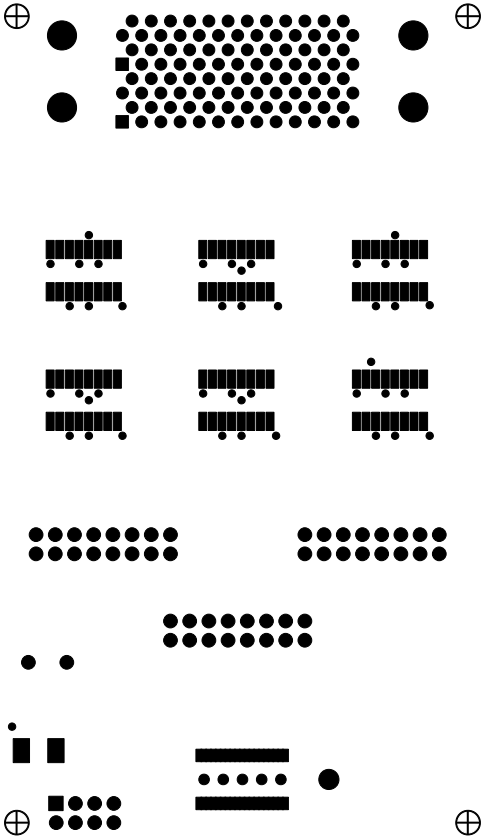

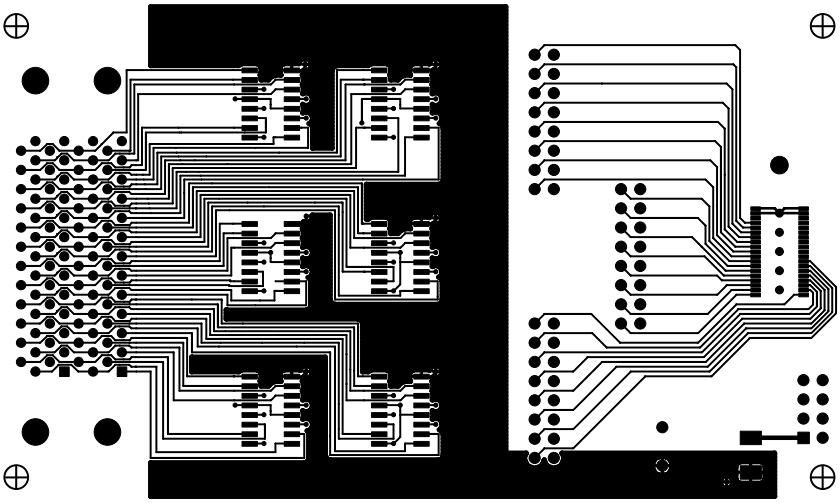

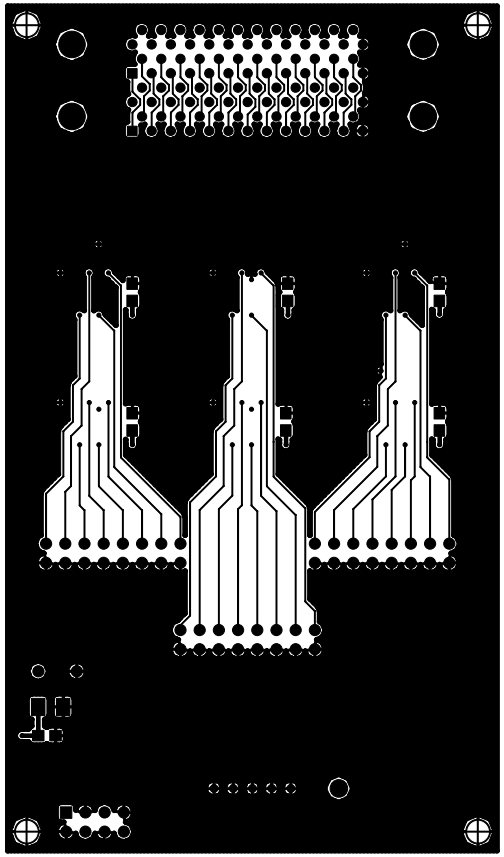

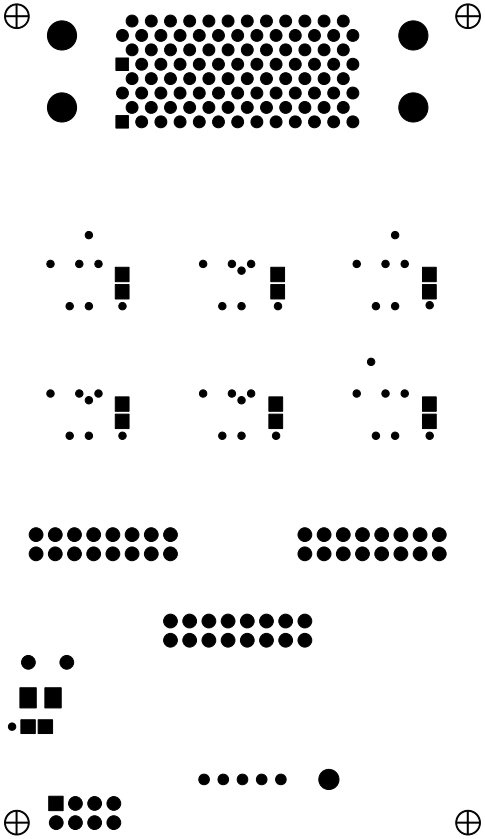

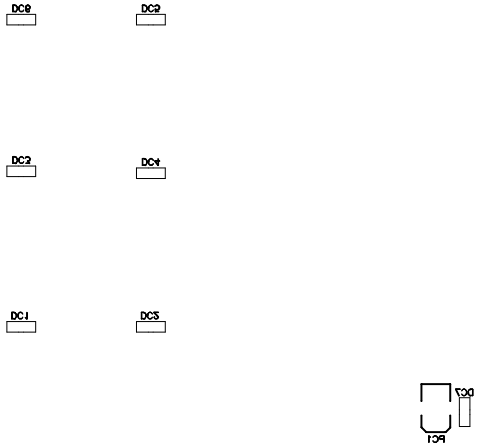
DC5
DC1
DC4
DC2
DC3
DC0
DC7
PC1

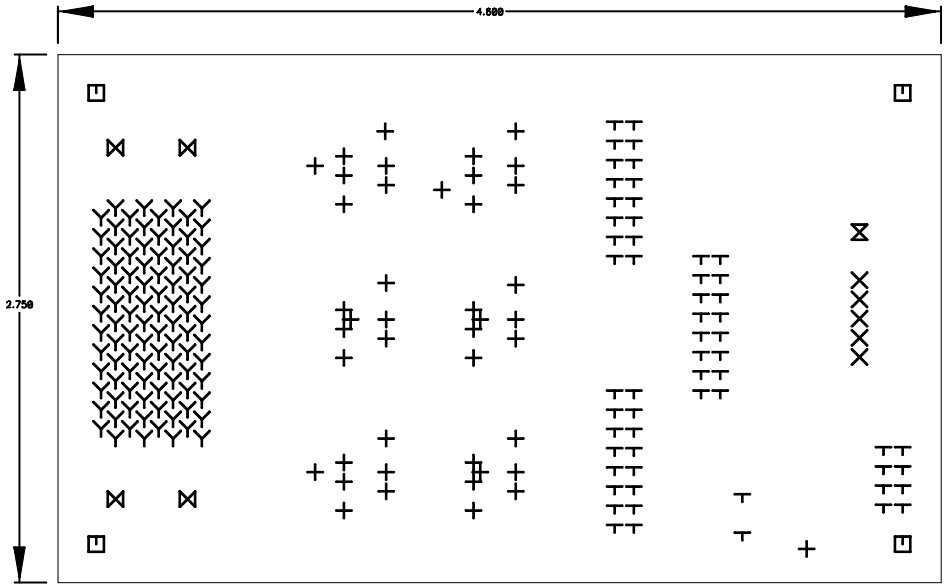

Drill Symbol Table		
Hole Dia (inch)	Symbol	Quantity
0.013		43
0.032		5
0.034		100
0.038		56
0.094		1
0.109		4
0.110		4

	Last	**updated - 9/26/2001**			
Count	RefDes	ComponentName	Value	PatternName	PartNumber
Ics					
1	U1	LVDS Receiver		SOIC16	DS90C032
1	U2	LVDS Receiver		SOIC16	DS90C032
1	U3	LVDS Receiver		SOIC16	DS90C032
1	U4	LVDS Receiver		SOIC16	DS90C032
1	U5	LVDS Receiver		SOIC16	DS90C032
1	U6	LVDS Receiver		SOIC16	DS90C032
Caps					
1	DC1	CAP-805	0.1uF	RC0805	0805B104K500NX
1	DC2	CAP-805	0.1uF	RC0805	0805B104K500NX
1	DC3	CAP-805	0.1uF	RC0805	0805B104K500NX
1	DC4	CAP-805	0.1uF	RC0805	0805B104K500NX
1	DC5	CAP-805	0.1uF	RC0805	0805B104K500NX
1	DC6	CAP-805	0.1uF	RC0805	0805B104K500NX
1	DC7	CAP-805	0.1uF	RC0805	0805B104K500NX
Fuses					
1	F1	SMT fuse	1/4 Amp		
LED					
1	LED1	Red LED vertical		Dialight	555-3009
Polarized	Caps				
1	PC1	CAP-POLAR-B	4.7uF	CAP_CASEB_3528	
Conns					
1	J1	VARC conn		100 Pin thru hole	AMP
1	J2	16Pin DualBergStix			
1	J3	16Pin DualBergStix			
1	J4	16Pin DualBergStix			
1	J5	LogicAnalyzer		38Pin SMT	AMP
1	J6	VFB Power Conn		8 Pin dual berg	

Control Cable

Cable Description

Manufacturer	Amphenol/Spectra-Strip
Cable Type	50 Conductor .025 pitch #30AWG Twist & Flat
Part Number	125-3001-068
Function	Control Cable
Length	26 Ft.
Location_1	VFB
Connector_1	T&B 50 pin fine pitch connector #311-050-302
Location_2	VARC
Connector_2	T&B 50 pin fine pitch D connector #311-050PM29
Comments	

Fire Safety

Flame Test Rating	
Insulation Material	PVC
Jacket Material	N/A
Smoke Mitigation	

Electrical Considerations

Connector pin-out assign.	See Attachment
Power conductor ampacity	See Attachment
Power conductor overcurrent protection	LVDS Signal Imax = 5ma.
High voltage conductor rating	150 Volt

Mechanical Considerations

Bend Radius for cable tray	3" Radius

Last modified	09-Jun-00	12:00 PM	**VFB** (**V**a **F**rontend **B**oard)		
Boolean signal name	**Function**	**lvds signal "+" pin no**	**lvds signal "-" pin no**	**Direction**	**VFB logic swing**
TRIG0	Dynode trigger 0	1	2	READ	LVDS
TRIG1	Dynode trigger 1	3	4	READ	LVDS
TRIG2	Dynode trigger 2	5	6	READ	LVDS
SDOUT	Serial data out of VFB	7	8	READ	(0,+5V)
SERCLK	Slo control serial clk	9	10	WRITE	(0,+5V)
SDIN	Serial data into VFB	11	12	WRITE	(0,+5V)
SEREN	Enable serial data transfer	13	14	WRITE	(0,+5V)
Spare	Spare	15	16	WRITE	(0,+5V)
TEST	Test Mode (common)	17	18	WRITE	(-2V,+2V)
CAL0	Hit cal-inject VA0	19	20	WRITE	(0,+5V)
CAL1	Hit cal-inject VA1	21	22	WRITE	(0,+5V)
CAL2	Hit cal-inject VA2	23	24	WRITE	(0,+5V)
SHIFT-IN0	Shift in VA0	25	26	WRITE	(-2V,+2V)
HOLD0	Sample/hold VA0	27	28	WRITE	(-2V,+2V)
CLK0	Clock signal VA0	29	30	WRITE	(-2V,+2V)
RES0	Reset VA0	31	32	WRITE	(-2V,+2V)
SHIFT-IN1	Shift in VA1	33	34	WRITE	(-2V,+2V)
HOLD1	Sample/hold VA1	35	36	WRITE	(-2V,+2V)
CLK1	Clock signal VA1	37	38	WRITE	(-2V,+2V)
RES1	Reset VA1	39	40	WRITE	(-2V,+2V)
SHIFT-IN2	Shift in VA2	41	42	WRITE	(-2V,+2V)
HOLD2	Sample/hold VA2	43	44	WRITE	(-2V,+2V)
CLK2	Clock signal VA2	45	46	WRITE	(-2V,+2V)
RES2	Reset VA2	47	48	WRITE	(-2V,+2V)
GND	AC Gnd at FEB	49	50		

Power Cable

Cable Description

Manufacturer	Alpha Wire & Cable
Cable Type	Twisted Sheilded Pair (2-pr ind and outer sheild #22 AWG)
Part Number	1243/2C
Function	Power Cable
Length	26 Ft.
Location_1	VFB
Connector_1	AMP-87631-4 (w/crimp pins #1-87309-4)
Location_2	Power Panel
Connector_2	AMP-87631-4 (w/crimp pins #1-87309-4)
Comments	

Fire Safety

Flame Test Rating	See UL Standard 1581
Insulation Material	Color-coded High Density Polypropylene
Jacket Material	PVC
Smoke Mitigation	See UL Standard 1581

Electrical Considerations

Connector pin-out assign.	+5v, Return, Sh'ld ; -5v,Return, Sh'ld ; Outer Sh'ld
Power conductor ampacity	See Attachment
Power conductor overcurrent protection	2 Amp
High voltage conductor rating	400 Volt

Mechanical Considerations

Bend Radius for Cable Tray	3" Radius

Signal Cable

Cable Description

Manufacturer	W.L.Gore & Associates
Cable Type	Sheilded Twinax Cable (Quiet Zone)
Part Number	HSN 4023/22'
Function	Signal Cable
Length	26 Ft.
Location_1	VFB
Connector_1	Keyed Housing P/N:60130170 (3 pin)
Location_2	VMM
Connector_2	Keyed Housing P/N:60130170 (3 pin)
Comments	Low level signal transmission 2ma max @ 2.5v max

Fire Safety

Flame Test Rating	UL94-VO
Insulation Material	Expanded PTFE
Jacket Material	FEP / .006 Blue
Smoke Mitigation	UL94-VO

Electrical Considerations

Connector pin-out assign.	Sig A, Sig B, and Ground
Power conductor ampacity	Standard 26 guage conductors
Power conductor overcurrent protection	Imax = 2ma
High voltage conductor rating	500v

Mechanical Considerations

Bend Radius for Cable Tray	5" Radius

QUIETZONE Shield Integrated Contact BACKPLANE/CUSTOMER INTERFACE ASSEMBLIES

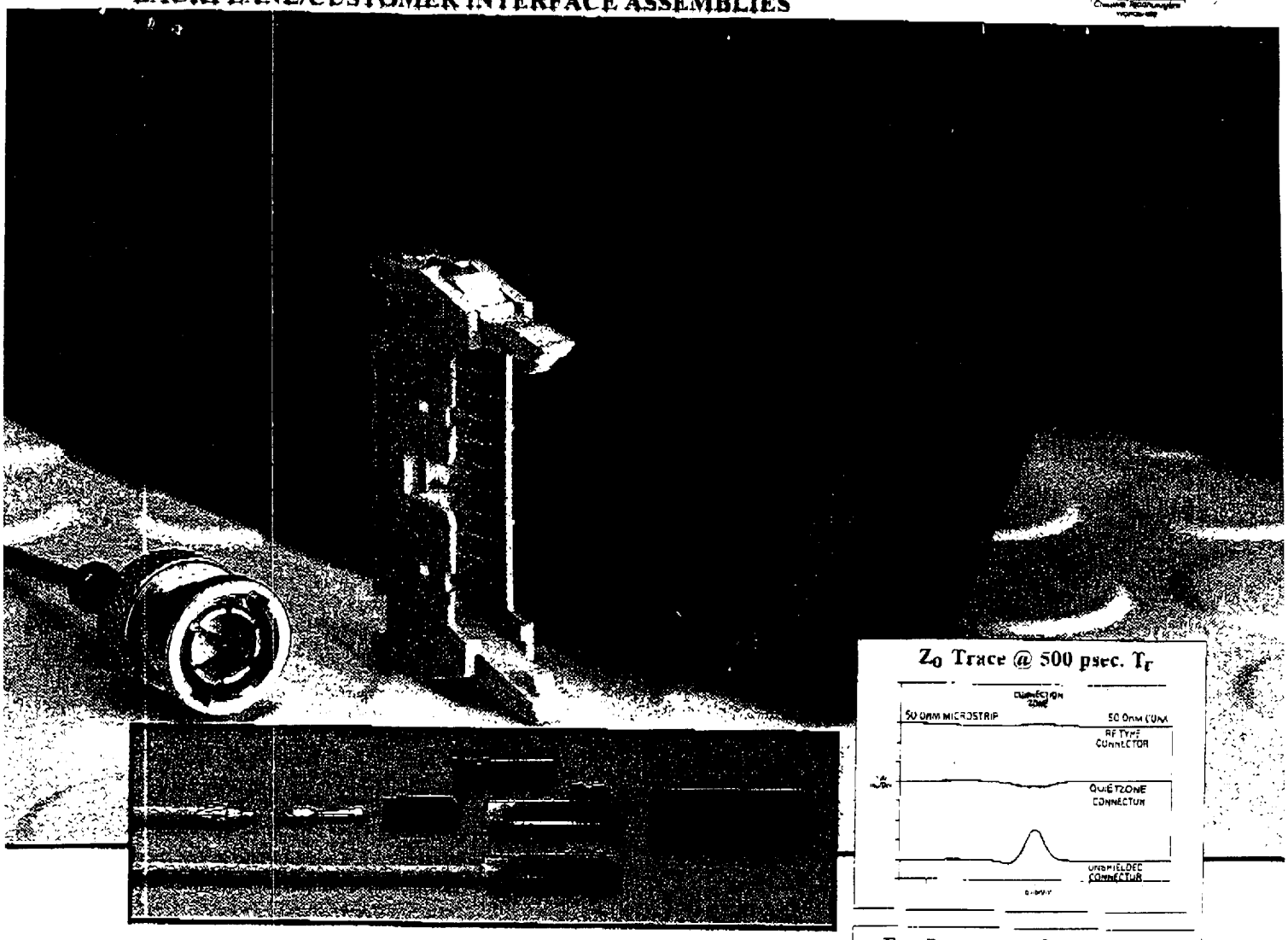

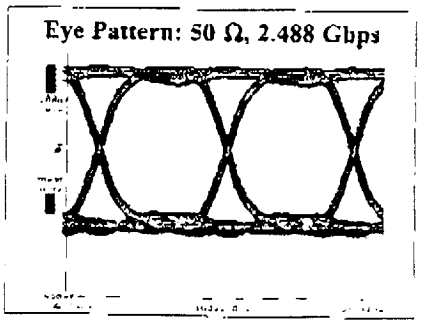

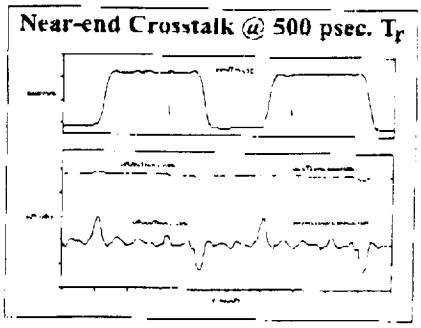

.025 Post Latch & Eject Compatible and Individually Shielded for Maximum Fidelity and EMI Performance.

W. L. Gore & Associates, Inc.'s, QUIETZONE assemblies exhibit performance on par with RF connectors in a .100" standard package. By extending the cable shield through each individual connector, impedance is maintained and crosstalk is kept well under 1 percent, even when transmitting gigabits per second. Automated processing and statistical process control ensure quality and reliability. Industry standard latch and eject connectors (Gore can supply headers, too) provide positive retention and polarized plugging. Other latching schemes and four-way stackable connectors are also available. GORE-TEX® expanded PTFE dielectric allows up to 25 gauge solid conductors for lowest loss. RF grade BNC connectors with captive center contacts and one-half inch stepped crimp sleeves ensure reliability and robustness at the customer interface.

W. L. Gore & Associates, Inc., Telecommunications Business Group
1-800-445-GORE

QUIETZONE ASSEMBLIES*

Center conductor:	Silver plated copper
Dielectric:	GORE-TEX® expanded PTFE
Shield:	Silver plated copper braid
Jacket:	FEP
Signal contact:	BeCu C17200 per QQ-C-533
Ground beam:	30µin min selective Au plate over 50µin min. Ni
Ground body:	Brass C26000 per ASTM-B16 30µin min Au in contact area, Au flash elswhere, over 50µin min Ni
Insulator, snaplock and housing	Thermoplastic, UL94-VO rated

*Other Materials available

Mechanical/Environmental

Mating Pin	.025" square or round
Pin length:	.230" thru .340"
Insertion Force	200 grams/contact pair
Withdrawal Force.	150 grams/contact pair
Normal Force.	4 beams x 100g/beam
Mating Cycles:	250 cycles
Cable Retention	2700g
Flammability Rating	UL94-VO
Operating Temperature	-40°C to 85°C

Trompeter BNC

Body:	Brass C3600 ½H per ASTM-B-16 100-300µin Bright Ni per QQ-N-290 Class 1 Form SB over 80-150µin Bright Cu per MIL-C-14550
Insulator:	PTFE per ASTM-D1457-85
Contact	**Plug:** Brass C3600 ½H per ASTM-B-16
	Jack: BeCu C17200 H per ASTM-B-196 or BeCu C17300 ½H per ASTM-B-197
	Both: 60-70µin Bright Au Type II Grade C Class 1 per MIL-G-45204 over 50-180µin Bright Ni per QQ-N-290 Class 1 per MIL-G-54204B over 80-150µin Bright Cu per MIL-C-14550
Crimp Sleeve:	Brass C3600 ½H per ASTM-B-16 100-300µin Bright Ni per QQ-N-290 Class 1 Form SB over 80-150µin Bright Cu per MIL-C-14550
VSWR	1.1.3 max to 4GHz
Voltage Rating:	500 VRMS @ Sea Level

Latch & Eject

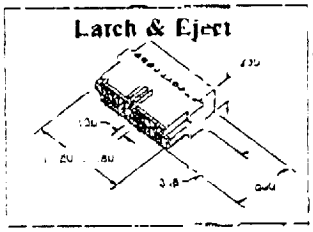

Stackable

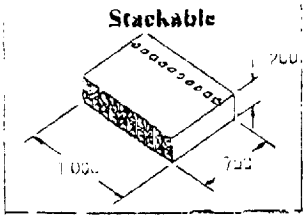

BNC Plug

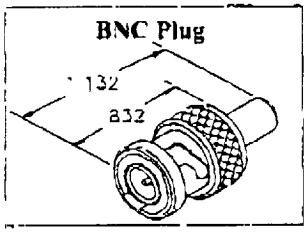

BNC Bulkhead Jack

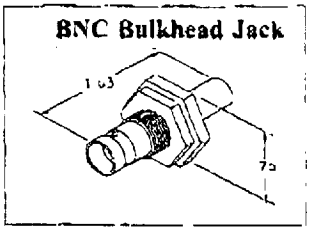

ORDERING INFORMATION

QZB — □ □ □ □ □ □ — □ □ □ . □ □

Impedance	BNC Type	QUIETZONE Connector	Pinout	Assembly Length Standard Tolerances
7 = 75 Ohms 0 = 50 Ohms	LP = Bulkhead Plug LJ = Bulkhead Jack GP = Cable Plug GJ = Cable Jack	01 = 1x2 thru 32 = 2x32	S = Stackable (up to 2x16) K = Signals on key side of housing W = Grounds on key side of housing	< 50" ± .5" 50" - 120" ± 1" >120" = ± 2"

W. L. Gore & Associates, Inc., 750 Otts Chapel Road, Newark, DE 19713
1 (800) 445-GORE Fax: (302) 737-2819

2710
5/97
McCl

GORE-TEX and QUIETZONE are trademarks of W. L. Gore & Associates, Inc
© Copyright 1997

QUIETZONE™ Series 50

High Density Shielded Coaxial Interconnects

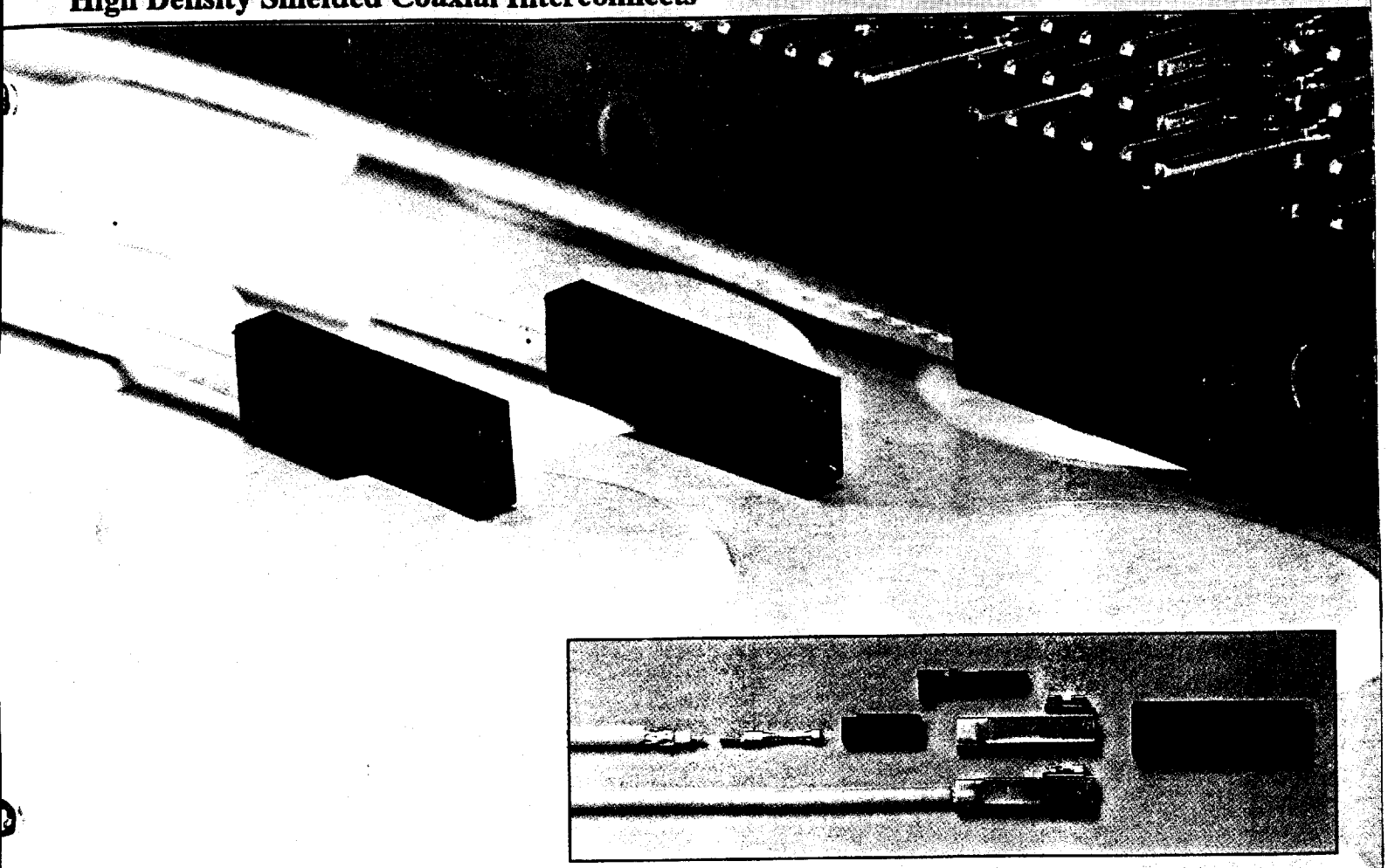

.025 Post Compatible and Individually Shielded for Maximum Fidelity

Gore's **QUIETZONE™ Series 50 Coaxial Assemblies** achieve RF performance in .100", industry standard .025" post packages. Maximum fidelity is achieved by extending the cable shield through the connector, individually shielding each signal path. Impedance is maintained through the connector and crosstalk is reduced to less than 0.5%, even at subnanosecond risetimes. GORE-TEX® expanded PTFE coaxial cable provides the lowest loss and highest signal speeds available in .100" packages. Signals skews of less than ± 25 picoseconds are available, making QUIETZONE Assemblies ideal for clockline and other critical timing applications. QUIETZONE assemblies' modular design allows packaging flexibility, automated production, and consistent quality and reliability.

Features:

HIGH FIDELITY

- Individually shielded signals
- Controlled impedance connector
- Crosstalk - near end of 0.5% at 500 psec. risetime, eight times less than unshielded connectors
- 25% lower loss than equivalent density interconnects
- Minimum ringing and associated fidelity loss
- Precise time matching available

PACKAGING

- Density of up to 50 signals/in.^{2}
- .025" post compatibility
- Standard .100" two position connectors
- Standard and custom multi-position packaging options

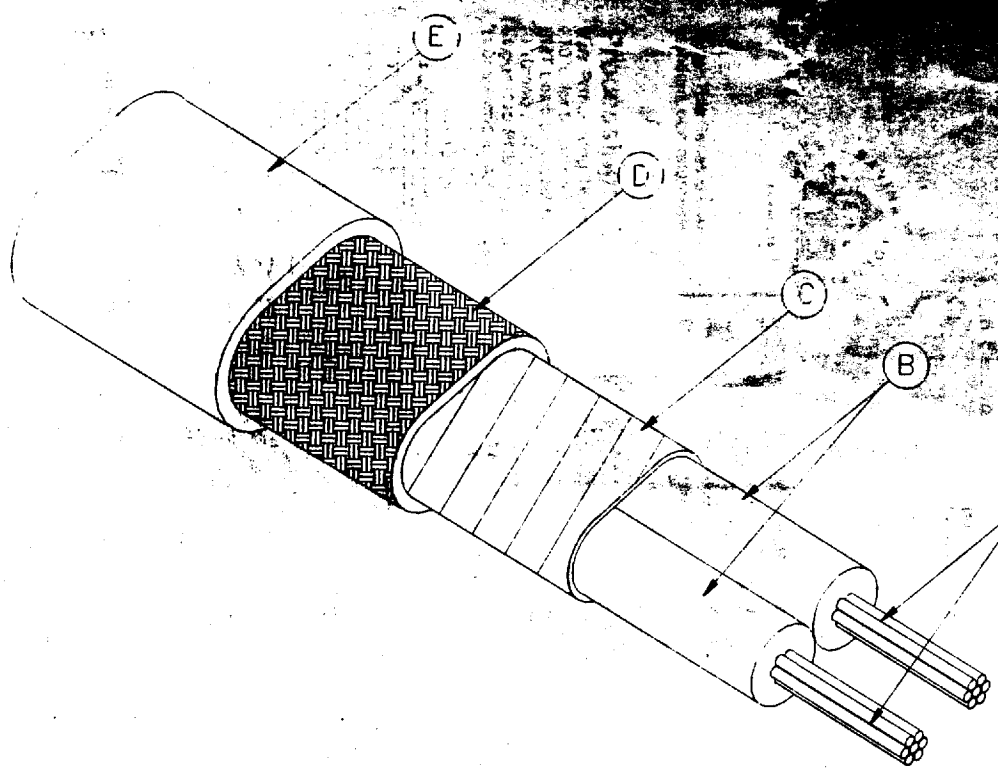

®GORE-TEX is a registered trademark of W.L. Gore & Assoc

ITEM	DESCRIPTION	CONSTRUCTION DETAILS
A.	Conductor:	AWG 26(7/34), SPC, .0189"
B.	Dielectrics:	GORE-TEX® Expanded PTFE, .045"; one core white, one core blue
C.	Shield #1:	Aluminized Polyester (.0003" Alum., .0005" Poly.) (Alum. facing out)
D.	Shield #2:	Braid, AWG 38, SPC
E.	Jacket:	FEP, .006", Blue, .119" Major axis .074" Minor axis

REQUIREMENTS

1. Characteristic Impedance, ohms — 100 ± 10 (Measured differentially)
2. Capacitance, pf/ft. — 16 Nom.
3. Velocity of Propagation, % of air — 85% Min.
4. Dielectric Strength, V RMS — 500
5. Operating Temperature, °C — −55 to 150°C

GORE
Creative Technologies Worldwide

W. L. GORE & ASSOCIATES, INC.
555 PAPER MILL ROAD
Newark, Delaware 19711
Phone: 302/738-4880 * FAX 302/738-7710

TITLE			
SHIELDED TWINAX CABLE AWG 26(7/34) 100 OHMS			
PROCESS DEPT	DATE	ENG'R MFP	DATE 03/17/99
		SIZE	DWG NO	REV